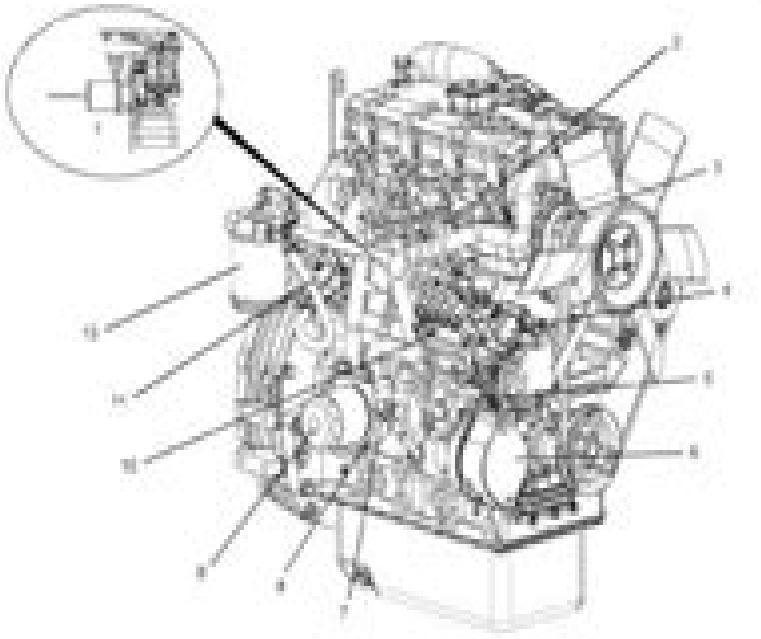

Illustration 3

Left side view of the 4040-DTT Turbocharged engine

(1) Fuel shutoff solenoid
(2) Number one fuel injector
(3) Water pump
(4) Lower engine oil filler cap
(5) Throttle lever
(6) Cover plate for the accessory drive
(7) Engine oil level gauge
(8) Engine oil cooler
(9) Engine oil filter
(10) Fuel injection pump
(11) Transfer pump
(12) Fuel filter

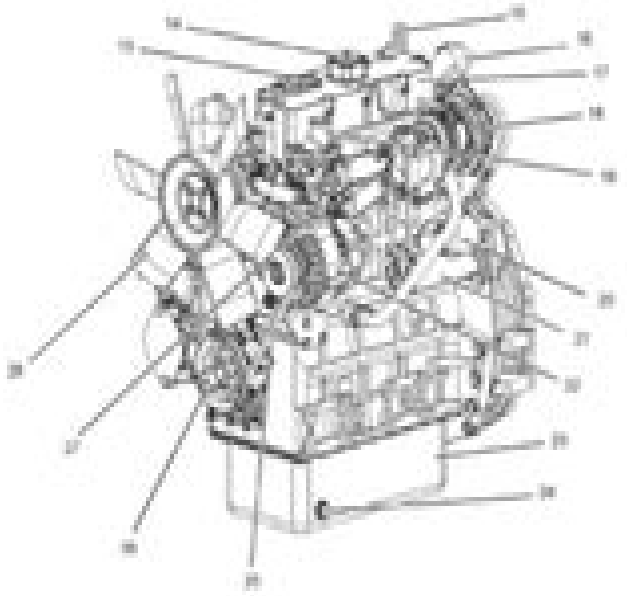

Illustration 4

Right side view of the 4040-DTT Turbocharged engine

(13) Top engine oil filler cap
(14) Crankcase breather
(15) Rear lifting eye
(16) Air inlet elbow
(17) Valve mechanism cover
(18) Turbocharger
(19) Water temperature regulator housing
(20) Starting motor solenoid
(21) Electric starting motor
(22) Alternator
(23) Engine oil pan
(24) Engine oil drain plug
(25) Fan drive belt
(26) Crankshaft pulley
(27) Coolant temperature switch
(28) Cooling fan

Fuel System

General Operation of the Fuel System

Refer to Systems Operation, "General Information" for locations of the components for the fuel system.

Perkins 404d Manual

L Manion

Perkins 404d Manual:

Delve into the emotional tapestry woven by Emotional Journey with in Experience **Perkins 404d Manual** . This ebook, available for download in a PDF format (Download in PDF: *), is more than just words on a page; itis a journey of connection and profound emotion. Immerse yourself in narratives that tug at your heartstrings. Download now to experience the pulse of each page and let your emotions run wild.

https://crm.avenza.com/results/detail/Documents/planmeca_prostyle_chair_service_manual.pdf

Table of Contents Perkins 404d Manual

1. Understanding the eBook Perkins 404d Manual
    - The Rise of Digital Reading Perkins 404d Manual
    - Advantages of eBooks Over Traditional Books
2. Identifying Perkins 404d Manual
    - Exploring Different Genres
    - Considering Fiction vs. Non-Fiction
    - Determining Your Reading Goals
3. Choosing the Right eBook Platform
    - Popular eBook Platforms
    - Features to Look for in an Perkins 404d Manual
    - User-Friendly Interface
4. Exploring eBook Recommendations from Perkins 404d Manual
    - Personalized Recommendations
    - Perkins 404d Manual User Reviews and Ratings
    - Perkins 404d Manual and Bestseller Lists
5. Accessing Perkins 404d Manual Free and Paid eBooks
    - Perkins 404d Manual Public Domain eBooks
    - Perkins 404d Manual eBook Subscription Services
    - Perkins 404d Manual Budget-Friendly Options

6. Navigating Perkins 404d Manual eBook Formats
    - ePub, PDF, MOBI, and More
    - Perkins 404d Manual Compatibility with Devices
    - Perkins 404d Manual Enhanced eBook Features
7. Enhancing Your Reading Experience
    - Adjustable Fonts and Text Sizes of Perkins 404d Manual
    - Highlighting and Note-Taking Perkins 404d Manual
    - Interactive Elements Perkins 404d Manual
8. Staying Engaged with Perkins 404d Manual
    - Joining Online Reading Communities
    - Participating in Virtual Book Clubs
    - Following Authors and Publishers Perkins 404d Manual
9. Balancing eBooks and Physical Books Perkins 404d Manual
    - Benefits of a Digital Library
    - Creating a Diverse Reading Collection Perkins 404d Manual
10. Overcoming Reading Challenges
    - Dealing with Digital Eye Strain
    - Minimizing Distractions
    - Managing Screen Time
11. Cultivating a Reading Routine Perkins 404d Manual
    - Setting Reading Goals Perkins 404d Manual
    - Carving Out Dedicated Reading Time
12. Sourcing Reliable Information of Perkins 404d Manual
    - Fact-Checking eBook Content of Perkins 404d Manual
    - Distinguishing Credible Sources
13. Promoting Lifelong Learning
    - Utilizing eBooks for Skill Development
    - Exploring Educational eBooks
14. Embracing eBook Trends
    - Integration of Multimedia Elements

- Interactive and Gamified eBooks

Perkins 404d Manual Introduction

In todays digital age, the availability of Perkins 404d Manual books and manuals for download has revolutionized the way we access information. Gone are the days of physically flipping through pages and carrying heavy textbooks or manuals. With just a few clicks, we can now access a wealth of knowledge from the comfort of our own homes or on the go. This article will explore the advantages of Perkins 404d Manual books and manuals for download, along with some popular platforms that offer these resources. One of the significant advantages of Perkins 404d Manual books and manuals for download is the cost-saving aspect. Traditional books and manuals can be costly, especially if you need to purchase several of them for educational or professional purposes. By accessing Perkins 404d Manual versions, you eliminate the need to spend money on physical copies. This not only saves you money but also reduces the environmental impact associated with book production and transportation. Furthermore, Perkins 404d Manual books and manuals for download are incredibly convenient. With just a computer or smartphone and an internet connection, you can access a vast library of resources on any subject imaginable. Whether youre a student looking for textbooks, a professional seeking industry-specific manuals, or someone interested in self-improvement, these digital resources provide an efficient and accessible means of acquiring knowledge. Moreover, PDF books and manuals offer a range of benefits compared to other digital formats. PDF files are designed to retain their formatting regardless of the device used to open them. This ensures that the content appears exactly as intended by the author, with no loss of formatting or missing graphics. Additionally, PDF files can be easily annotated, bookmarked, and searched for specific terms, making them highly practical for studying or referencing. When it comes to accessing Perkins 404d Manual books and manuals, several platforms offer an extensive collection of resources. One such platform is Project Gutenberg, a nonprofit organization that provides over 60,000 free eBooks. These books are primarily in the public domain, meaning they can be freely distributed and downloaded. Project Gutenberg offers a wide range of classic literature, making it an excellent resource for literature enthusiasts. Another popular platform for Perkins 404d Manual books and manuals is Open Library. Open Library is an initiative of the Internet Archive, a non-profit organization dedicated to digitizing cultural artifacts and making them accessible to the public. Open Library hosts millions of books, including both public domain works and contemporary titles. It also allows users to borrow digital copies of certain books for a limited period, similar to a library lending system. Additionally, many universities and educational institutions have their own digital libraries that provide free access to PDF books and manuals. These libraries often offer academic texts, research papers, and technical manuals, making them invaluable resources for students and researchers. Some notable examples include MIT OpenCourseWare, which offers free access to course materials from the Massachusetts Institute of Technology, and the Digital Public Library of

America, which provides a vast collection of digitized books and historical documents. In conclusion, Perkins 404d Manual books and manuals for download have transformed the way we access information. They provide a cost-effective and convenient means of acquiring knowledge, offering the ability to access a vast library of resources at our fingertips. With platforms like Project Gutenberg, Open Library, and various digital libraries offered by educational institutions, we have access to an ever-expanding collection of books and manuals. Whether for educational, professional, or personal purposes, these digital resources serve as valuable tools for continuous learning and self-improvement. So why not take advantage of the vast world of Perkins 404d Manual books and manuals for download and embark on your journey of knowledge?

FAQs About Perkins 404d Manual Books

1. Where can I buy Perkins 404d Manual books? Bookstores: Physical bookstores like Barnes & Noble, Waterstones, and independent local stores. Online Retailers: Amazon, Book Depository, and various online bookstores offer a wide range of books in physical and digital formats.
2. What are the different book formats available? Hardcover: Sturdy and durable, usually more expensive. Paperback: Cheaper, lighter, and more portable than hardcovers. E-books: Digital books available for e-readers like Kindle or software like Apple Books, Kindle, and Google Play Books.
3. How do I choose a Perkins 404d Manual book to read? Genres: Consider the genre you enjoy (fiction, non-fiction, mystery, sci-fi, etc.). Recommendations: Ask friends, join book clubs, or explore online reviews and recommendations. Author: If you like a particular author, you might enjoy more of their work.
4. How do I take care of Perkins 404d Manual books? Storage: Keep them away from direct sunlight and in a dry environment. Handling: Avoid folding pages, use bookmarks, and handle them with clean hands. Cleaning: Gently dust the covers and pages occasionally.
5. Can I borrow books without buying them? Public Libraries: Local libraries offer a wide range of books for borrowing. Book Swaps: Community book exchanges or online platforms where people exchange books.
6. How can I track my reading progress or manage my book collection? Book Tracking Apps: Goodreads, LibraryThing, and Book Catalogue are popular apps for tracking your reading progress and managing book collections. Spreadsheets: You can create your own spreadsheet to track books read, ratings, and other details.
7. What are Perkins 404d Manual audiobooks, and where can I find them? Audiobooks: Audio recordings of books, perfect for listening while commuting or multitasking. Platforms: Audible, LibriVox, and Google Play Books offer a wide

selection of audiobooks.

8. How do I support authors or the book industry? Buy Books: Purchase books from authors or independent bookstores. Reviews: Leave reviews on platforms like Goodreads or Amazon. Promotion: Share your favorite books on social media or recommend them to friends.
9. Are there book clubs or reading communities I can join? Local Clubs: Check for local book clubs in libraries or community centers. Online Communities: Platforms like Goodreads have virtual book clubs and discussion groups.
10. Can I read Perkins 404d Manual books for free? Public Domain Books: Many classic books are available for free as theyre in the public domain. Free E-books: Some websites offer free e-books legally, like Project Gutenberg or Open Library.

Find Perkins 404d Manual :

~~planmeca prostyle chair service manual~~
~~platinum english grade 10 samplea examination paper 1 memorandum~~
plate tectonics study guide vocabulary answers
plant biology manual almuth tschunko
pixl predicted paper 2 november 2014 foundation tier
plant lesson plans 3rd grade
~~pixl club maths practice papers~~
plantronics bluetooth model 320 user guide
pixl 2013 june aqa c4
pixl club enlargement
plantronics m15user guide
pizza sauce recipe to can
pixl english language past paper
pixel club maths mark scheme june 2013
~~pittsburgh roll former manual~~

Perkins 404d Manual :

hindi essay nibandh on □ □ □ □ □□ □□ □ sahitya aur - Dec 13 2022

Perkins 404d Manual

web mar 4 2023 यह न ब ध स ह त य और सम ज sahitya aur samaj nibandh क ब च स ब ध क पड त ल करत ह इस ब त पर प रक श ड लत ह क क स स ह त य क क र य क स सम द य क
sahitya aur samaj nibandh in hindi ncert vip notes - Jul 08 2022
web aug 1 2018 essay on sahitya aur samaj in hindi see answer advertisement abijitcid स ह त य और सम ज म नव ज वन और उसक द व र गठ त सम ज स स र म सर व च च ह इस
1 best essay on sahitya aur samaj स ह त य और - Feb 15 2023
web mar 1 2023 sahitya aur samaj स ह त य और सम ज hindi essay paragraph for class 10 12 and competitive examination
स ह त य और सम ज पर न ब ध essay on literature and life in hindi - Jun 19 2023
web feb 6 2019 hindi essay on sahitya aur samaj स ह त य और सम ज for class 10 class 12 b a students and competitive examinations absolute study february 6 2019 hindi
स ह त य और सम ज पर न ब ध sahitya aur samaj essay in hindi - Aug 09 2022
web feb 19 2018 hindi essay on sahitya samaj ka darpan स ह त य सम ज क दर पण ह complete hindi essay for class 10 class 12 and graduation and other classes
hindi essay on sahitya aur samaj evirtualguru - Jul 20 2023
web oct 17 2021 स ह त य क द व र ह सम ज क एक नई स च नई उर ज और प र रण म लत ह स ह त य पर सम ज म ह न व ल पर वर तन घटन ओ आद क असर पड त ह
hindi essay on sahitya aur samaj स ह त य और सम ज for - Apr 17 2023
web aug 28 2021 hindi essay nibandh on स ह त य और सम ज sahitya aur samaj hindi paragraph speech for class 6 7 8 9 10 and 12 students
स ह त य और सम ज पर न ब ध sahitya aur samaj par nibandh - Oct 11 2022
web स ह त य और सम ज sahitya aur samaj पर न ब ध essay on literature and society in hindi म नव स वभ वत क र य श ल प र ण ह च पच प ब ठन उसक ल ए स भव नह ह इस
sahitya aur samaj स ह त य और सम ज hindi essay paragraph - Sep 10 2022
web we are providing about nibandh on sahitya samaj ka darpan in hindi language स ह त य सम ज क दर पण ह ह न द न ब ध nibandh on sahitya samaj ka darpan 100 200
essay on sahitya aur samaj brainly in - Jan 02 2022

sahitya aur samaj essay in hindi स ह त य और सम ज - Mar 16 2023
web jun 27 2023 sahitya aur samaj par nibandh स ह त य और सम ज पर न ब ध 200 words 300 words 500 words essay for class 1 to class 10

Perkins 404d Manual

स ह त य सम ज क दर पण ह ह न द न ब ध nibandh on sahitya - Apr 05 2022
web contextual translation of essay on sahitya aur samaj in hindi into hindi human translations with examples mymemory world s largest translation memory
स ह त य सम ज क दर पण ह ह द न ब ध literature - Nov 12 2022
web jul 31 2021 स ह त य और सम ज पर न ब ध sahitya aur samaj par nibandh in hindi essay on sahitya aur samaj in hindi sahitya aur samaj par nibandh 10 lines essay o
free essays on sahitya aur samaj through essaydepot com - Sep 29 2021

essays on essay on sahitya aur samaj in hindi language - Dec 01 2021

paragraph on sahitya aur samaj in hindi स ह त य और सम ज पर - May 06 2022
web free essays on essay on sahitya aur samaj in hindi language get help with your writing 1 through 30
स ह त य और सम ज पर न ब ध sahitya aur samaj par nibandh in - Jun 07 2022
web jan 20 2017 essay on sahitya aur samaj get the answers you need now nidta4n6eethi nidta4n6eethi 20 01 2017 hindi secondary school answered essay on sahitya aur
स ह त य और सम ज पर न ब ध sahitya our samaj par essay in hindi - May 18 2023
web jul 9 2023 स ह त य और सम ज न मक न ब ध क न ब ध ल खन nibandh lekhan स अन य सम बन ध त श र षक अर थ त स ह त य और सम ज स म लत ज लत ह आ क ई श र षक
स ह त य और सम ज न ब ध my coaching - Jan 14 2023
web feb 17 2019 द स त स ह त य और सम ज पर हम र द व र ल ख यह आर ट कल sahitya aur samaj essay in hindi आपक पस द आए त इस अपन द स त म श यर करन न भ ल
स ह त य और सम ज पर न ब ध essay on literature - Aug 21 2023
web jun 24 2017 sahitya aur samaj मन ष य क भ ड क उस तरह सम ज नह कह ज सकत ज स सब ज य य अन ज क एकत र त सम ह क ढ र त कह ज त ह पर सम ज नह व स तव म
essay on sahitya aur samaj in hindi brainly - Feb 03 2022

translate essay on sahitya aur samaj in in hindi mymemory - Oct 31 2021

hindi essay on sahitya samaj ka darpan evirtualguru - Mar 04 2022
web essays on sahitya aur samaj sahitya aur samaj search search results vidyarthi aur samaj seva the canterville ghost

summary purchasing canterville chase as the story

essex county college biology 103 syllabus 2023 - Jul 24 2022

web 2 essex county college biology 103 syllabus 2023 08 20 from one another but despite all the hardships along the way the three succeeded retold with the help of an award winning author this younger

essex county college biology 103 syllabus pdf - Aug 25 2022

web essex county college biology 103 syllabus school science and mathematics oct 13 2022 computational bioengineering aug 11 2022 this book is a significant contribution to the state of the art in the field of computational bioengineering from the need for a living human database to meshless methods in biomechanics from computational

biology bio essex county college - Oct 07 2023

web this course is open to biology pre medicine and general science majors only this course reviews fundamental concepts in life sciences to enable students to succeed in more advanced courses beginning with bio 103 bio 100 will not fulfill any part of the science requirement toward graduation for either science majors or non science majors

course syllabus outline essex county college - May 02 2023

web essex county college lab 3 0 other n a prerequisites grades of c or better in chm 101 or chm 103 and bio 104 or bio 122 co requisites none concurrent courses none course outline revision date fall 2010 3 4discuss the central dogma and transfer of genetic information between biological entities and related

biology 103 syllabus spring 2017 essex county college - Sep 06 2023

web view homework help biology 103 syllabus spring 2017 from bio misc at essex county college essex county college biology department bio 103 section 003 general biology i spring 2017

essex county college biology 103 syllabus uniport edu - Jun 22 2022

web jul 21 2023 essex county college biology 103 syllabus 1 6 downloaded from uniport edu ng on july 21 2023 by guest essex county college biology 103 syllabus right here we have countless books essex county college biology 103 syllabus and collections to check out we additionally meet the expense of variant types and plus type

a s in general science 0603 60 credits essex county college - Jan 30 2023

web bio 101 bio 102 bio 103 bio 104 bio116 bio 121 bio 122 bio 210 bio 211 bio 220 bio 225 bio 230 bio 237 bio 241 bio251 chm 101 chm 102 chm 103 chm 104 chm 203 chm 204 geo 101 geo 102 phy 101 phy 102 phy 103 phy 104 phy105 choose twenty four credits of science courses 24 additional course

biology chemistry physics essex county college - Dec 29 2022

web our mission is set on providing our students with learning activities that raise critical thinking skills and scientific reasoning in these science based fields for their success upon transfer to four year colleges and universities location level ii

blue area telephone 973 877 3430 fax 973 877 1930

home essex county college - Apr 20 2022

web for over 50 years essex county college has been educating and enriching the lives of our students our academic programs consider the needs of our local community but our quality attracts applicants from all over the world degrees programs essex county college offers a wide range of associate degree programs academic certificate programs

ecc essex county college studocu - Nov 27 2022

web foundations of biology bio 100fundamentals of computer science csc 100fundamentals of practical nursing lpn 101general physics iii phy 203general psychology i personality and social aspects psy 101general biology i bio 103general biology ii bio 104general chemistry i chm 103general chemistry ii chm 104global

catalog home essex county college - Oct 27 2022

web this is essex county college s first online digital catalog it is designed to provide students with an easier way to 1 locate information when applying to the college 2 decide on a major or certificate program or 3 determine requirements for graduation we invite you to peruse the 2021 2022 catalog to find a program which interests you

bio 103 ecc general biology i studocu - Aug 05 2023

web studying bio 103 general biology i at essex county college on studocu you will find coursework lecture notes assignments and much more for bio 103 ecc

essex county college division of biology chemistry chm 103 - Apr 01 2023

web division of biology chemistry chm 103 general chemistry i course outline course number name chm 103 general chemistry i credit hours 4 0 contact hours 6 0 lecture 3 0 lab 3 0 other n a prerequisites grades of c or better in mth 092 eng 096 and rdg 096 or esl 105 106 and chm 100 or high school chemistry co

essex county college biology 103 syllabus 2022 ws 1 ps2pdf - Sep 25 2022

web essex county college biology 103 syllabus 5 5 profiles are sections on foreign students at us institutions professional education and the history of higher education in the us among other topics annotation copyrighted by book news inc portland or annual report of the new york state college of agriculture at cornell university and the

essex county college biology 103 syllabus - Jun 03 2023

web june 16th 2018 essex county college biology 103 syllabus pdf free download here essex county college division of biology amp chemistry chm 103 sloat essex edu

essex county college biology 103 syllabus uniport edu - Feb 16 2022

web may 25 2023 biology 103 syllabus can be taken as competently as picked to act research studies related to the teaching of science charles john pieper 1931 transforming the workforce for children birth through age 8 national research council

syllabus chm 103 section 101 summer 2020 1 doc essex county college - Jul 04 2023
web syllabus chm 103 section 101 summer 2020 1 doc essex county college biology chemistry department chm 103 tentative schedule section 101 general course hero
biology pre medicine a s essex county college - May 22 2022
web ecc joins fight against breast cancer oct 17 23 essex county college was well represented on sunday october 15 at the american cancer society s 26 th annual making strides against breast cancer walk in newark the essex county college pacesetters contingent of 90 participants raised 1 539 as of october 16 for cancer research we
essex county college biology 103 syllabus - Mar 20 2022
web june 16th 2018 essex county college biology 103 syllabus pdf free download here essex county college division of biology amp chemistry chm 103 sloat essex edu divisions biology chemistry chm 103 pdf essex county college mathematics and physics division mth
course descriptions essex county college - Feb 28 2023
web division of biology chemistry and physics toggle division of biology chemistry and physics biology pre medicine as 0601 essex county college 303 university ave newark nj 07102 west essex campus 730 bloomfield avenue west caldwell nj 07006 have questions contact us sitemap privacy
carolyn e begg home acm digital library - Sep 12 2022
jan 18 2014 october 5 2021 history edit an edition of database systems 2001 database systems a practical approach to design implementation and management by thomas
business database systems thomas connolly carolyn begg - Jan 16 2023
nov 2 2007 thomas connolly carolyn begg pearson education limited nov 2 2007 computers 552 pages are you responsible for designing and creating the databases that
database systems a practical approach to design pearson - Nov 14 2022
thomas m connolly is the head of the computing and information systems division at the university of paisley carolyn e begg is a lecturer at the university of paisley with research
connolly t m and begg c e 2005 database systems a - Apr 07 2022
bec connolly interview becconnolly boxing connolly
database systems google books - Apr 19 2023
feb 2 2010 dr carolyn begg is a lecturer in the school of computing at the university of the west of scotland where she teaches business database systems advanced business
database systems practical approach to design - Jun 21 2023

database systems a practical approach to design implementation and management 13 reviews authors thomas m connolly author carolyn begg author summary this book is ideal

database systems thomas connolly carolyn begg - Sep 24 2023

apr 17 2015 database systems a practical approach to design implementation and management global edition thomas connolly carolyn begg pearson education apr 17

database systems by thomas connolly open library - Jun 09 2022

jul 14 2021 thomas connolly university of paisley carolyn begg paisley university best value etextbook mo print 186 66 paperback 186 66 price reduced from 233 32

database systems a practical approach to design - Aug 23 2023

thomas m connolly carolyn e begg addison wesley 2005 database design 1374 pages this book places a strong emphasis on good design practice allowing readers to

instagram - Dec 03 2021

database systems google books - Jul 22 2023

thomas m connolly carolyn begg school of computing engineering and physical sciences research output book report book overview fingerprint abstract this book is ideal for a

bec connolly talks about her next fight bullying fight youtube - Jan 04 2022

connolly on the couch biography books the guardian - Feb 05 2022

database systems a practical approach to design - May 20 2023

oct 28 2015 thomas m connolly is the head of the computing and information systems division at the university of paisley carolyn e begg is a lecturer at the university of paisley

database systems a practical approach to design - Dec 15 2022

sistemas de bases de datos un enfoque practico para diseno implementacion y gestion database systems thomas m connolly carolyn e begg

biblio database systems a practical approach to design - Jul 10 2022

connolly t m and begg c e 2005 database systems a practical approach to design implementation and management 4th edition pearson education harlow references

database systems a practical approach to design - May 08 2022

sep 23 2001 billy connolly is the moses of comedy who had ten commandments each one being thou shalt be very fucking funny he helped stand ups in the uk and ireland find their

database solutions thomas connolly carolyn begg google - Oct 13 2022

thomas m connolly is the head of the computing and information systems division at the university of paisley carolyn e begg is a lecturer at the university of paisley with research

database systems a practical approach to design - Mar 18 2023

thomas m connolly carolyn e begg edition 3rd ed imprint harlow england new york addison wesley 2002 physical description xlix 1236 p ill some col 24 cm series

amazon com database systems a practical approach - Feb 17 2023

jan 8 2014 thomas connolly university of paisley carolyn begg paisley university etextbook mo view options print 186 66 view options need help get in touch

database systems a practical approach to design - Aug 11 2022

thomas m connolly carolyn begg 3 67 rating details 210 ratings 10 reviews this book places a strong emphasis on good design practice allowing readers to master design

database systems a practical approach to design pearson - Mar 06 2022

the link you followed may be broken or the page may have been removed go back to instagram