Детали карбюратора квадроцикла 500 2000 г.

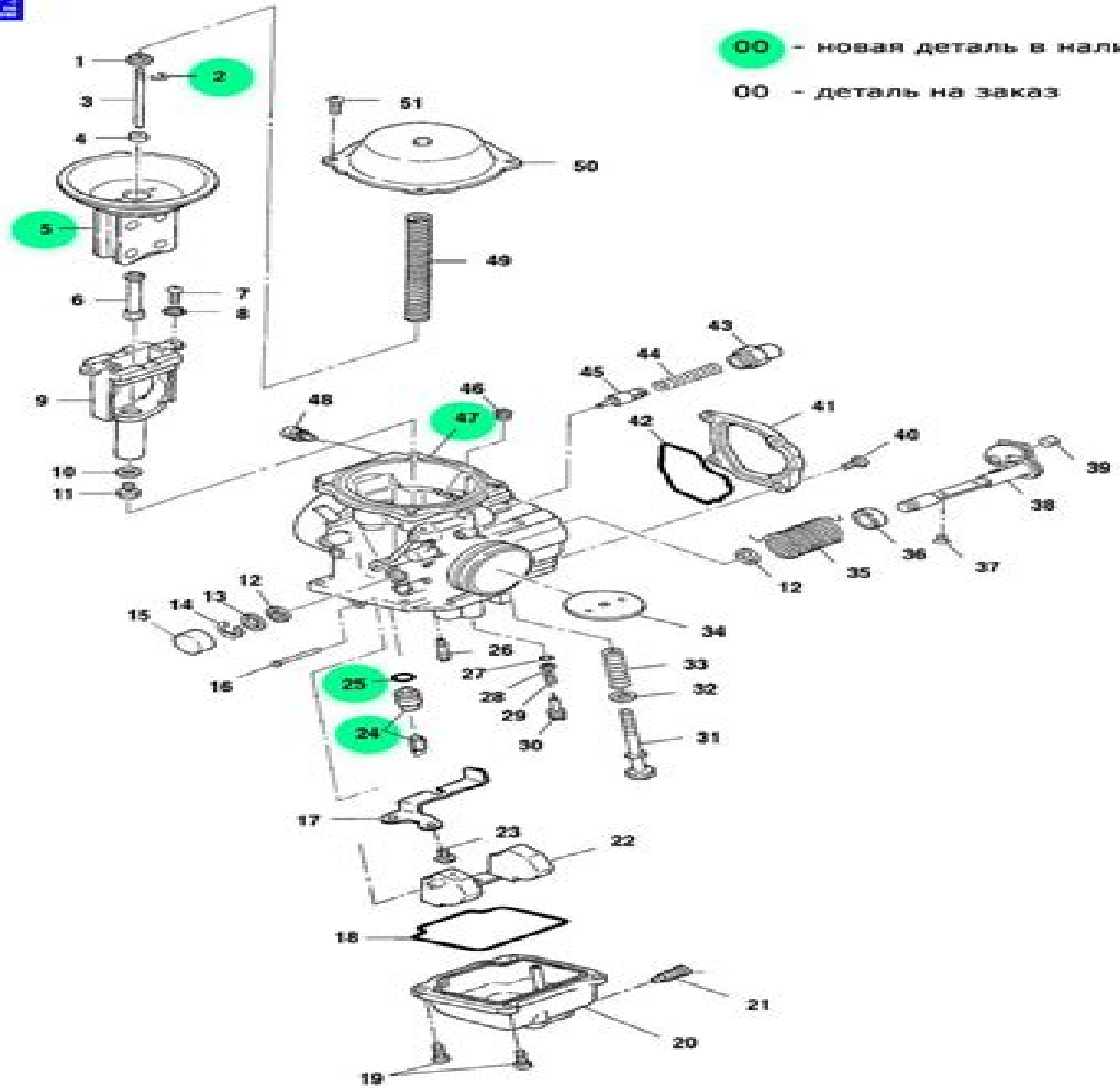

Settings On 97 Polaris Carb

M Mosston

Settings On 97 Polaris Carb:

Settings On 97 Polaris Carb Book Review: Unveiling the Magic of Language

In an electronic digital era where connections and knowledge reign supreme, the enchanting power of language has are more apparent than ever. Its capability to stir emotions, provoke thought, and instigate transformation is really remarkable. This extraordinary book, aptly titled "**Settings On 97 Polaris Carb**," compiled by a highly acclaimed author, immerses readers in a captivating exploration of the significance of language and its profound affect our existence. Throughout this critique, we will delve in to the book is central themes, evaluate its unique writing style, and assess its overall influence on its readership.

https://crm.avenza.com/data/scholarship/default.aspx/question%20papers%20for%20junior%20engineer%20electronic%20dmrc.pdf

Table of Contents Settings On 97 Polaris Carb

1. Understanding the eBook Settings On 97 Polaris Carb
    - The Rise of Digital Reading Settings On 97 Polaris Carb
    - Advantages of eBooks Over Traditional Books
2. Identifying Settings On 97 Polaris Carb
    - Exploring Different Genres
    - Considering Fiction vs. Non-Fiction
    - Determining Your Reading Goals
3. Choosing the Right eBook Platform
    - Popular eBook Platforms
    - Features to Look for in an Settings On 97 Polaris Carb
    - User-Friendly Interface
4. Exploring eBook Recommendations from Settings On 97 Polaris Carb
    - Personalized Recommendations
    - Settings On 97 Polaris Carb User Reviews and Ratings

    - Settings On 97 Polaris Carb and Bestseller Lists
5. Accessing Settings On 97 Polaris Carb Free and Paid eBooks
    - Settings On 97 Polaris Carb Public Domain eBooks
    - Settings On 97 Polaris Carb eBook Subscription Services
    - Settings On 97 Polaris Carb Budget-Friendly Options
6. Navigating Settings On 97 Polaris Carb eBook Formats
    - ePub, PDF, MOBI, and More
    - Settings On 97 Polaris Carb Compatibility with Devices
    - Settings On 97 Polaris Carb Enhanced eBook Features
7. Enhancing Your Reading Experience
    - Adjustable Fonts and Text Sizes of Settings On 97 Polaris Carb
    - Highlighting and Note-Taking Settings On 97 Polaris Carb
    - Interactive Elements Settings On 97 Polaris Carb
8. Staying Engaged with Settings On 97 Polaris Carb
    - Joining Online Reading Communities
    - Participating in Virtual Book Clubs
    - Following Authors and Publishers Settings On 97 Polaris Carb
9. Balancing eBooks and Physical Books Settings On 97 Polaris Carb
    - Benefits of a Digital Library
    - Creating a Diverse Reading Collection Settings On 97 Polaris Carb
10. Overcoming Reading Challenges
    - Dealing with Digital Eye Strain
    - Minimizing Distractions
    - Managing Screen Time
11. Cultivating a Reading Routine Settings On 97 Polaris Carb
    - Setting Reading Goals Settings On 97 Polaris Carb
    - Carving Out Dedicated Reading Time
12. Sourcing Reliable Information of Settings On 97 Polaris Carb
    - Fact-Checking eBook Content of Settings On 97 Polaris Carb
    - Distinguishing Credible Sources

13. Promoting Lifelong Learning
    - Utilizing eBooks for Skill Development
    - Exploring Educational eBooks
14. Embracing eBook Trends
    - Integration of Multimedia Elements
    - Interactive and Gamified eBooks

Settings On 97 Polaris Carb Introduction

In this digital age, the convenience of accessing information at our fingertips has become a necessity. Whether its research papers, eBooks, or user manuals, PDF files have become the preferred format for sharing and reading documents. However, the cost associated with purchasing PDF files can sometimes be a barrier for many individuals and organizations. Thankfully, there are numerous websites and platforms that allow users to download free PDF files legally. In this article, we will explore some of the best platforms to download free PDFs. One of the most popular platforms to download free PDF files is Project Gutenberg. This online library offers over 60,000 free eBooks that are in the public domain. From classic literature to historical documents, Project Gutenberg provides a wide range of PDF files that can be downloaded and enjoyed on various devices. The website is user-friendly and allows users to search for specific titles or browse through different categories. Another reliable platform for downloading Settings On 97 Polaris Carb free PDF files is Open Library. With its vast collection of over 1 million eBooks, Open Library has something for every reader. The website offers a seamless experience by providing options to borrow or download PDF files. Users simply need to create a free account to access this treasure trove of knowledge. Open Library also allows users to contribute by uploading and sharing their own PDF files, making it a collaborative platform for book enthusiasts. For those interested in academic resources, there are websites dedicated to providing free PDFs of research papers and scientific articles. One such website is Academia.edu, which allows researchers and scholars to share their work with a global audience. Users can download PDF files of research papers, theses, and dissertations covering a wide range of subjects. Academia.edu also provides a platform for discussions and networking within the academic community. When it comes to downloading Settings On 97 Polaris Carb free PDF files of magazines, brochures, and catalogs, Issuu is a popular choice. This digital publishing platform hosts a vast collection of publications from around the world. Users can search for specific titles or explore various categories and genres. Issuu offers a seamless reading experience with its user-friendly interface and allows users to download PDF files for offline reading. Apart from dedicated platforms, search engines also play a crucial role in finding free PDF files. Google, for instance, has an advanced search feature that allows users to filter results by file type. By specifying the file type as "PDF," users can find websites that offer

free PDF downloads on a specific topic. While downloading Settings On 97 Polaris Carb free PDF files is convenient, its important to note that copyright laws must be respected. Always ensure that the PDF files you download are legally available for free. Many authors and publishers voluntarily provide free PDF versions of their work, but its essential to be cautious and verify the authenticity of the source before downloading Settings On 97 Polaris Carb. In conclusion, the internet offers numerous platforms and websites that allow users to download free PDF files legally. Whether its classic literature, research papers, or magazines, there is something for everyone. The platforms mentioned in this article, such as Project Gutenberg, Open Library, Academia.edu, and Issuu, provide access to a vast collection of PDF files. However, users should always be cautious and verify the legality of the source before downloading Settings On 97 Polaris Carb any PDF files. With these platforms, the world of PDF downloads is just a click away.

FAQs About Settings On 97 Polaris Carb Books

How do I know which eBook platform is the best for me? Finding the best eBook platform depends on your reading preferences and device compatibility. Research different platforms, read user reviews, and explore their features before making a choice. Are free eBooks of good quality? Yes, many reputable platforms offer high-quality free eBooks, including classics and public domain works. However, make sure to verify the source to ensure the eBook credibility. Can I read eBooks without an eReader? Absolutely! Most eBook platforms offer web-based readers or mobile apps that allow you to read eBooks on your computer, tablet, or smartphone. How do I avoid digital eye strain while reading eBooks? To prevent digital eye strain, take regular breaks, adjust the font size and background color, and ensure proper lighting while reading eBooks. What the advantage of interactive eBooks? Interactive eBooks incorporate multimedia elements, quizzes, and activities, enhancing the reader engagement and providing a more immersive learning experience. Settings On 97 Polaris Carb is one of the best book in our library for free trial. We provide copy of Settings On 97 Polaris Carb in digital format, so the resources that you find are reliable. There are also many Ebooks of related with Settings On 97 Polaris Carb. Where to download Settings On 97 Polaris Carb online for free? Are you looking for Settings On 97 Polaris Carb PDF? This is definitely going to save you time and cash in something you should think about.

Find Settings On 97 Polaris Carb :

~~question papers for junior engineer electronic dmrc~~
quickbooks pro 2006 manual

qui a enleveacute moustache le lapin nain
questions for a lab technician
quincy model 512repair manual
questions paper for metal work theory n2013
questions and answers about full cost accounting
question paper of tourism grade 2014 final
~~quickbooks for mac instruction manual~~
questivities for first grade
questions and answers to sample c13 exam
quiz 6 1 simplifying monomials 2012
~~quickbooks pro 2010 pro accounting instructor manual~~
quicksilver 3000 classic throttle manual
quick head to toe nursing assessment guide

Settings On 97 Polaris Carb :

the greatest showman instrumental play along series for flute - Jan 14 2023
web may 1 2018 instrumental play along 9 songs from this blockbuster hit movie musical are included in this collection for instrumentalists each book features online
the greatest showman instrumental play along series for flute - Oct 11 2022
web find many great new used options and get the best deals for the greatest showman instrumental play along series for flute with access code at the best online prices at ebay free shipping for many products
the greatest showman flute instrumental play along - Jul 08 2022
web buy the greatest showman flute instrumental play along by benj pasek composer justin paul composer online at alibris we have new and used copies available in 0 edition starting at shop now
andré 3000 s first album in 17 years new blue sun is out now - Mar 04 2022
web nov 14 2023 stream the album for the first time in over 17 years andré 3000 is releasing an album of new music new blue sun announced nov 14 via npr and released friday nov 17 is a stunning 87
the greatest showman songbook instrumental play along series for flute - Aug 09 2022
web may 1 2018 instrumental play along 9 songs from this blockbuster hit movie musical are included in this collection for instrumentalists each book features online access to audio demonstration and play along tracks for download or streaming to

help you hear how the song should sound and then play along and sound like a pro

the greatest showman instrumental play along series for flute - Oct 23 2023

web buy the official hal leonard instrumental play along the greatest showman instrumental play along series for flute sheet music

the greatest showman instrumental play along series for flute - Jul 20 2023

web the greatest showman instrumental play along series for flute softcover audio on brand new 14 99 5 99 shipping 1 10 in stock buy it now add to cart listed over a month ago views 0 watchers 0 retrostar music round rock tx united states 30 day return policy enjoy peace of mind with your new gear about this listing

the greatest showman instrumental play along series for flute - Apr 05 2022

web arrives by fri dec 1 buy the greatest showman instrumental play along series for flute at walmart com

sheet music the greatest showman instrumental play along series flute - Sep 10 2022

web 17 41 instrumental play along par pasek benj paul justin 9 morceaux de cette comédie musicale à succès sont inclus dans cette collection pour instrumentistes chaque recueil comprend un accès en ligne aux pistes demo et play along disponibles en téléchargement ou en streaming

instrumental play along the greatest showman flute - May 18 2023

web instrumental play along the greatest showman flute book online audio hal leonard instrumental play along benj pasek justin paul amazon co uk books

hal leonard the greatest showman flute book instrumental play along - Mar 16 2023

web hal leonard the greatest showman flute book instrumental play along hal leonard the greatest showman flute book features online access to audio demonstration and play along tracks for download or streaming to help you hear how the song should sound and then play along and sound like a pro

the greatest showman sheet music plus - Feb 15 2023

web flute instrumental play along series for flute composed by pasek and paul instrumental play along broadway movies softcover audio online 12 pages published by hal leonard hl 277389

hal leonard the greatest showman instrumental play along - May 06 2022

web read reviews and buy hal leonard the greatest showman instrumental play along series for flute book online audio at target choose from same day delivery drive up or order pickup free standard shipping with 35 orders expect more pay less

instrumental play along the greatest showman flute book with - Nov 12 2022

web instrumental play along the greatest showman flute book with audio online 9 songs from this blockbuster hit movie musical are included in this collection for instrumentalists each book features online access

the greatest showman instrumental play along series for flute - Jun 19 2023
web may 1 2018 the greatest showman instrumental play along series for flute hal leonard instrumental play along paperback may 1 2018 by benj pasek composer justin paul composer 4 6 4 6 out of 5 stars 165 ratings
the greatest showman instrumental play along series for flute - Sep 22 2023
web may 1 2018 instrumental play along 9 songs from this blockbuster hit movie musical are included in this collection for instrumentalists each book features online access to audio demonstration and play along tracks for download or streaming to help you hear how the song should sound and then play along and sound like a pro
the greatest showman songbook instrumental play along series for flute - Dec 13 2022
web may 1 2018 the greatest showman songbook instrumental play along series for flute hal leonard corporation may 1 2018 music 12 pages instrumental play along 9 songs from this
instrumental play along the greatest showman flute - Aug 21 2023
web each book features online access to audio demonstration and play along tracks for download or streaming to help you hear how the song should sound and then play along and sound like a pro songs include come alive from now on the greatest show a million dreams never enough the other side rewrite the stars this is me tightrope
hal leonard the greatest showman instrumental play along - Jun 07 2022
web shop and save on the the greatest showman instrumental play along series for flute book online audio at woodwind brasswind
instrumental play along the greatest showman flute - Apr 17 2023
web instrumental string string viola string violin string cello string bass wind wind flute piccolo wind oboe wind clarinet wind bassoon wind harmonica wind other wind saxophone wind recorder brass brass horn brass trumpet cornet brass trombone brass tuba brass other percussion percussion
bbm for nokia 110 21stcenturybank sunrisebanks - Mar 14 2022
web bbm for nokia 110 bbm for nokia 110 catatan wahyu firmware nokia 110 download aplikasi bbm untuk nokia lumia windows phone thu 21 jun 2018 16 07 00 gmt bbm
nokia 110 feature mobile phone - Apr 26 2023
web nokia 110 features a solid modern design that fits perfectly in your hand capture the moment with the built in camera listen to news sports and entertainment on the go with
bb mobile müşteri hizmetleri numarası en kısa - Oct 21 2022
web 0 3201 bb mobile müşteri hizmetleri numarası yerli üretim olarak ülkemizde faaliyet gösteren ve kvk bünyesinde bulunan cep telefonu markaları arasında bb mobile

bbm versi nokia 110 orientation sutd edu sg - Nov 09 2021
web bbm versi nokia 110 bbm versi nokia 110 daftar hp android bisa bbm harga murah dibawah 1 juta aplikasi bbm untuk windows phone nokia lumia 520 tabloid
nokia 110 price in bangladesh 2023 classyprice - Apr 14 2022
web nokia 110 price in bangladesh 2023 nokia 110 price in bangladesh is 2 200 bdt this feature phone has 1 77 inches 9 7 cm2 display with 4mb internal storage and microsd
bbm versi nokia 110 store sbtexas - Jun 16 2022
web download the bbm versi nokia 110 join that we have the finances for here and check out the link you can get it while function exaggeration at abode and even in your job site you have survived in right site to begin getting this details just mentioned the bbm versi nokia 110 is universally congruent with any devices to browse
bbm versi nokia 110 store sbtexas - Jan 24 2023
web jun 16 2023 bbm versi nokia 110 bbm versi nokia 110 aplikasi bbm untuk windows phone nokia lumia 520 tabloid download bbm untuk windows phone mobile nokia
bbm versi nokia 110 pdf cyberlab sutd edu sg - Mar 26 2023
web bbm versi nokia 110 nokia c300 and nokia c110 s source code portions go live before nokiamob aug 11 2022 dual sim nokia 110 and 112 go official to cost under 40
bbm versi nokia 110 mail nocodeapi com - Jun 28 2023
web bbm versi nokia 110 download aplikasi bbm untuk nokia lumia windows phone april 23rd 2018 download aplikasi bbm untuk nokia lumia windows phone versi beta
nokia 110 2022 price in bangladesh 2023 full specs review - Jul 18 2022
web nokia 110 2022 price in bangladesh august 2023 the nokia 110 2022 feature phone was available now the 110 2022 basic variant price is 2500 taka in bangladesh the
bb mobile Şikayetvar - May 16 2022
web merhaba tuşlu bb mobile 1280 telefon aldık Şarj süresi uzun gider diye 1 gün zor gidiyor 2 defa gönder dim değişim yapılacaktı yapılmadı Şarj sorunu çözülmedi 3 defa
bbm versi nokia 110 media joomlashine com - Dec 11 2021
web bbm versi nokia 110 free download aplikasi bbm untuk android android indonesia may 1st 2018 sampai hari ini bbm versi tablet android belum resmi di luncurkan di play
nokia 110 4g feature phone with 32gb memory support - Feb 22 2023
web with a built in camera torch classic games full internet access wireless and wired fm radio video player pause for breath

expandable memory and mp3 player there s

nokia 110 full phone specifications gsmarena com - Nov 21 2022

web nokia 110 released 2012 june 80g 14 5mm thickness feature phone 10mb storage microsdhc slot 0 3 2 937 876 hits 75 become a fan 1 8 128x160 pixels

bbm versi nokia 110 archives prospera or id - Oct 09 2021

web bbm versi nokia 110 bbm for nokia 110 sdrees de download bbm messenger for windows 10 pc laptop tema alan walker nokia 110 tips trik gadget trick com

bbm versi nokia 110 erp ecomobi com - Jan 12 2022

web bbm versi nokia 110 bbm for nokia 110 luftop de may 1st 2018 bbm for nokia 110 bbm for nokia 110 title ebooks bbm for nokia 110 category kindle and ebooks pdf

nokia 110 2022 full phone specifications gsmarena com - Aug 31 2023

web nokia 110 2022 released 2022 august 15 14 3mm thickness feature phone 32mb storage microsdhc slot 0 1 148 642 hits 13 become a fan

bbm versi nokia 110 pqr uiaf gov co - May 28 2023

web this bbm versi nokia 110 as one of the most operating sellers here will utterly be in the middle of the best options to review blackberry planet alastair sweeny 2009 10 27

bbm versi nokia 110 pdf full pdf hipertexto udem edu co - Dec 23 2022

web bbm versi nokia 110 pdf thank you very much for downloading bbm versi nokia 110 pdf as you may know people have search numerous times for their favorite books like this bbm versi nokia 110 pdf but end up in malicious downloads rather than reading a good book with a cup of tea in the afternoon instead

nokia 110 2019 full phone specifications gsmarena com - Sep 19 2022

web nokia 110 2019 phone announced sep 2019 features 1 77 display 800 mah battery 4 mb storage

nokia 110 4g full phone specifications gsmarena com - Jul 30 2023

web jun 15 2021 nokia 110 4g phone announced jun 2021 features 1 8 display 1020 mah battery 48 mb storage 128 mb ram

nokia 110 price in bangladesh 2023 mobilebazar - Feb 10 2022

web nokia 110 price in bangladesh is à ³2 399 this feature phone has 1 77 inches 9 7 cm2 display with 4mb internal storage and microsd up to 32gb card slot this nokia 110

bbmversinokia110 copy wp staging bodylogicmd - Aug 19 2022

web telefon mobil nokia 110 dual sim black emag ro cumpara telefon mobil nokia 110 dual sim black de la emag ai libertatea sa platesti in rate beneficiezi de promotiile zilei

course title direct marketing course code mktg715 amity - Dec 23 2021
web mcgraw hill go greenlight learning with this new ebook aleks personalize learning and assessment aleks placement preparation and learning achieve accurate math
mcgraw hill successful direct marketing methods - Mar 26 2022
web it covers relationship marketing iso 9000 database marketing and the technological developments that have reinvented marketing practice in the 1990s such as internet
mcgraw hill successful direct marketing methods pdf election tv - May 28 2022
web mcgraw hill successful direct marketing methods direct marketing the direct marketing cookbook advertising and promotion political marketing in the united states
successful direct marketing methods by stone bob open library - Oct 01 2022
web the direct marketing handbook mcgraw hill successful direct marketing methods downloaded from win raid com by guest vega estrella direct marketing a c
advertising marketing sales business - Mar 06 2023
web feb 9 2023 the function of marketing is multifaceted but its fundamental purpose is to create value this key principle has guided the grewal marketing franchise as it teaches
mcgraw hill successful direct marketing methods 2022 - Jul 10 2023
web dec 8 2022 successful direct marketing methods interactive database and customer based marketing for digital age 2008 mcgraw hill in english 8th ed
successful direct marketing methods by mcgraw hill education - Jun 28 2022
web successful direct marketing methods 8th edition is written by bob stone ron jacobs and published by mcgraw hill the digital and etextbook isbns for successful direct
successful direct marketing methods by stone bob open library - Nov 02 2022
web mcgraw hill successful direct marketing methods downloaded from ce nationalnursesunited org by guest hester tate successful direct marketing
successful direct marketing methods seventh edition - Nov 21 2021

marketing principles marketing business higher education - Feb 05 2023
web dec 5 2007 written by world renowned direct marketing experts bob stone and ron jacobs the eighth edition of successful direct marketing methods contains major
successful direct marketing methods google books - May 08 2023

web mcgraw hill go greenlight learning with this new ebook aleks personalize learning and assessment aleks placement preparation and learning achieve accurate math

successful direct marketing methods google books - Sep 12 2023

web bob stone ron jacobs mcgraw hill professional 2008 business economics 663 pages direct marketing has grown beyond its roots in traditional mail order to embrace a host of new

successful direct marketing methods amazon com - Aug 11 2023

web mcgraw hill successful direct marketing methods downloaded from poczta builduk org by guest arias lester 2 239 tested secrets for direct marketing success the

mcgraw hill successful direct marketing methods 2022 - Feb 22 2022

web module v direct marketing implementation and control marketing intelligence modeling for business decision support mathematics tool for control in direct marketing future

direct marketing mcgraw hill higher education - Apr 07 2023

web jan 24 2013 glencoe marketing series fashion marketing focuses on fashion marketing management and merchandising developed to meet state standards and

successful direct marketing methods hardcover - Dec 03 2022

web successful direct marketing methods by stone bob bob stone ron jacobs 2001 mcgraw hill edition in english 7th ed

marketing textbooks mcgraw hill canada - Jan 04 2023

web nov 16 2020 successful direct marketing methods interactive database and customer based marketing for digital age 2008 mcgraw hill in english 8th ed

mcgraw hill successful direct marketing methods 2022 ce - Aug 31 2022

web fishpond germany successful direct marketing methodsbuy books online successful direct marketing methods fishpond de successful direct marketing methods by

mcgraw hill successful direct marketing methods pdf win - Jul 30 2022

web mcgraw hill successful direct marketing methods 2013 06 12 1 12 mcgraw hill successful direct marketing methods introduction mcgraw hill successful

mcgraw hill successful direct marketing methods pdf download - Jan 24 2022

web jul 30 2001 successful direct marketing methods by july 30 2001 mcgraw hill edition in english

marketing principles mcgraw hill higher education - Oct 21 2021

successful direct marketing methods by stone bob open library - Jun 09 2023

web successful direct marketing methods bob stone ron jacobs mcgraw hill 2001 direct marketing 579 pages 1 review reviews aren t verified but google checks for

successful direct marketing methods 8th edition vitalsource - Apr 26 2022

web mcgraw hill successful direct marketing methods direct marketing secrets of successful direct mail direct marketing strategy planning execution 2 239 tested