MODEL 534 FB

NAMES OF PARTS

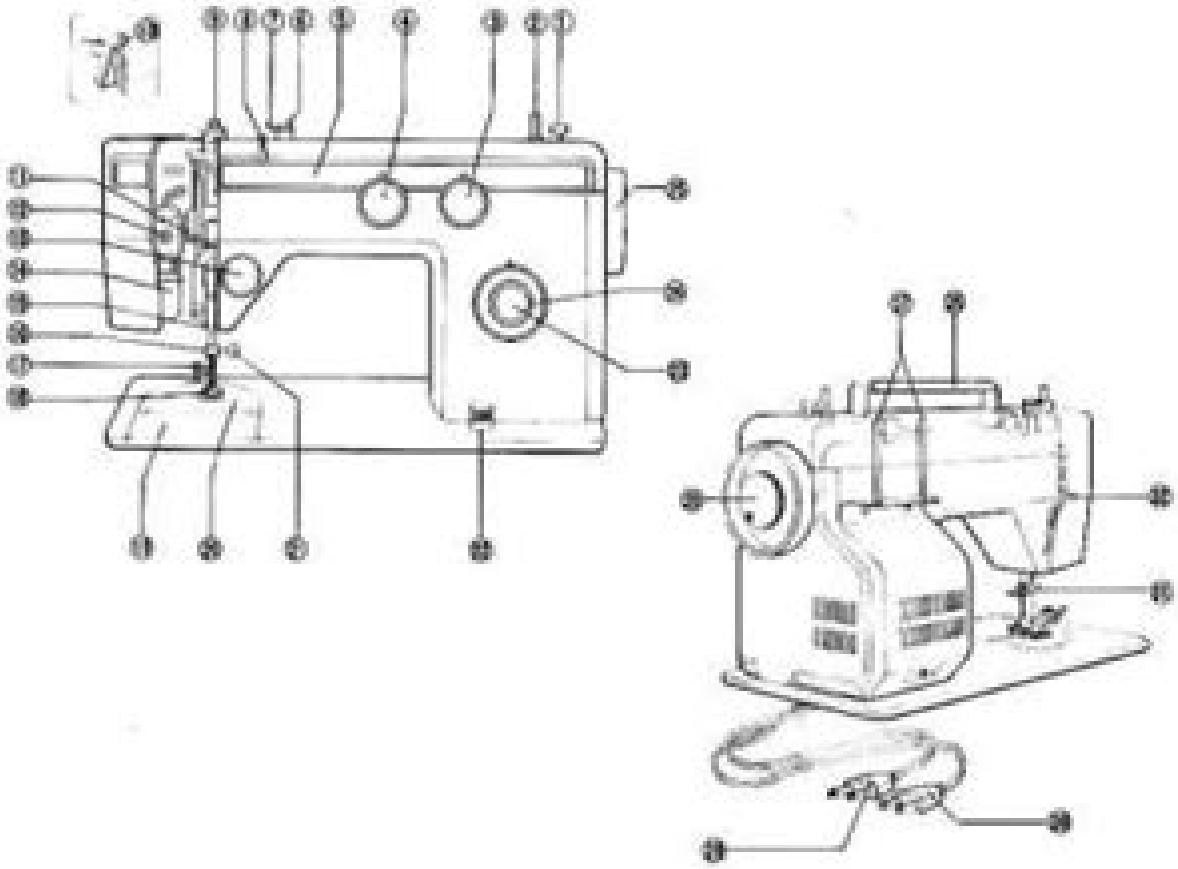

1. Bobbin Winder Stop
2. Bobbin Winder Spindle
3. Stitch Width/Buttonholer Knob
4. Pattern Selector Knob
5. Pattern Chart
6. Bobbin Winder Tension Disc
7. Rear Thread Guide
8. Front Thread Guide
9. Pressure Regulator
10. Thread Take-Up Lever
11. Upper Thread Guide
12. Sewing Light Switch
13. Upper Thread Tension Regulator
14. Sewing Light Bulb
15. Lower Thread Guide
16. Needle Bar Thread Guide
17. Presser Foot Thumb Screw
18. Presser Foot
19. Hinged Cover Plate
20. Needle Plate
21. Needle Clamp Screw
22. Drop-Feed Knob
23. Reverse Stitch Button
24. Stitch Length Knob
25. Hand Wheel
26. Handle
27. Spool Pin
28. Stop Motion Knob
29. Light Plug
30. Motor Plug
31. Thread Cutter
32. Presser Foot Lifter

Downloaded from Manualshelf.com

Necchi Sewing Machine Manual 536fb

Singer Sewing Machine Co. Ltd

Necchi Sewing Machine Manual 536fb:

Fuel your quest for knowledge with is thought-provoking masterpiece, **Necchi Sewing Machine Manual 536fb** . This educational ebook, conveniently sized in PDF (PDF Size: *), is a gateway to personal growth and intellectual stimulation. Immerse yourself in the enriching content curated to cater to every eager mind. Download now and embark on a learning journey that promises to expand your horizons. .

https://crm.avenza.com/About/virtual-library/index.jsp/recipe%20for%20meatless%20baked%20ziti.pdf

Table of Contents Necchi Sewing Machine Manual 536fb

1. Understanding the eBook Necchi Sewing Machine Manual 536fb
    - The Rise of Digital Reading Necchi Sewing Machine Manual 536fb
    - Advantages of eBooks Over Traditional Books
2. Identifying Necchi Sewing Machine Manual 536fb
    - Exploring Different Genres
    - Considering Fiction vs. Non-Fiction
    - Determining Your Reading Goals
3. Choosing the Right eBook Platform
    - Popular eBook Platforms
    - Features to Look for in an Necchi Sewing Machine Manual 536fb
    - User-Friendly Interface
4. Exploring eBook Recommendations from Necchi Sewing Machine Manual 536fb
    - Personalized Recommendations
    - Necchi Sewing Machine Manual 536fb User Reviews and Ratings
    - Necchi Sewing Machine Manual 536fb and Bestseller Lists
5. Accessing Necchi Sewing Machine Manual 536fb Free and Paid eBooks
    - Necchi Sewing Machine Manual 536fb Public Domain eBooks
    - Necchi Sewing Machine Manual 536fb eBook Subscription Services
    - Necchi Sewing Machine Manual 536fb Budget-Friendly Options

6. Navigating Necchi Sewing Machine Manual 536fb eBook Formats
    - ePub, PDF, MOBI, and More
    - Necchi Sewing Machine Manual 536fb Compatibility with Devices
    - Necchi Sewing Machine Manual 536fb Enhanced eBook Features
7. Enhancing Your Reading Experience
    - Adjustable Fonts and Text Sizes of Necchi Sewing Machine Manual 536fb
    - Highlighting and Note-Taking Necchi Sewing Machine Manual 536fb
    - Interactive Elements Necchi Sewing Machine Manual 536fb
8. Staying Engaged with Necchi Sewing Machine Manual 536fb
    - Joining Online Reading Communities
    - Participating in Virtual Book Clubs
    - Following Authors and Publishers Necchi Sewing Machine Manual 536fb
9. Balancing eBooks and Physical Books Necchi Sewing Machine Manual 536fb
    - Benefits of a Digital Library
    - Creating a Diverse Reading Collection Necchi Sewing Machine Manual 536fb
10. Overcoming Reading Challenges
    - Dealing with Digital Eye Strain
    - Minimizing Distractions
    - Managing Screen Time
11. Cultivating a Reading Routine Necchi Sewing Machine Manual 536fb
    - Setting Reading Goals Necchi Sewing Machine Manual 536fb
    - Carving Out Dedicated Reading Time
12. Sourcing Reliable Information of Necchi Sewing Machine Manual 536fb
    - Fact-Checking eBook Content of Necchi Sewing Machine Manual 536fb
    - Distinguishing Credible Sources
13. Promoting Lifelong Learning
    - Utilizing eBooks for Skill Development
    - Exploring Educational eBooks
14. Embracing eBook Trends
    - Integration of Multimedia Elements

- Interactive and Gamified eBooks

Necchi Sewing Machine Manual 536fb Introduction

Necchi Sewing Machine Manual 536fb Offers over 60,000 free eBooks, including many classics that are in the public domain. Open Library: Provides access to over 1 million free eBooks, including classic literature and contemporary works. Necchi Sewing Machine Manual 536fb Offers a vast collection of books, some of which are available for free as PDF downloads, particularly older books in the public domain. Necchi Sewing Machine Manual 536fb : This website hosts a vast collection of scientific articles, books, and textbooks. While it operates in a legal gray area due to copyright issues, its a popular resource for finding various publications. Internet Archive for Necchi Sewing Machine Manual 536fb : Has an extensive collection of digital content, including books, articles, videos, and more. It has a massive library of free downloadable books. Free-eBooks Necchi Sewing Machine Manual 536fb Offers a diverse range of free eBooks across various genres. Necchi Sewing Machine Manual 536fb Focuses mainly on educational books, textbooks, and business books. It offers free PDF downloads for educational purposes. Necchi Sewing Machine Manual 536fb Provides a large selection of free eBooks in different genres, which are available for download in various formats, including PDF. Finding specific Necchi Sewing Machine Manual 536fb, especially related to Necchi Sewing Machine Manual 536fb, might be challenging as theyre often artistic creations rather than practical blueprints. However, you can explore the following steps to search for or create your own Online Searches: Look for websites, forums, or blogs dedicated to Necchi Sewing Machine Manual 536fb, Sometimes enthusiasts share their designs or concepts in PDF format. Books and Magazines Some Necchi Sewing Machine Manual 536fb books or magazines might include. Look for these in online stores or libraries. Remember that while Necchi Sewing Machine Manual 536fb, sharing copyrighted material without permission is not legal. Always ensure youre either creating your own or obtaining them from legitimate sources that allow sharing and downloading. Library Check if your local library offers eBook lending services. Many libraries have digital catalogs where you can borrow Necchi Sewing Machine Manual 536fb eBooks for free, including popular titles.Online Retailers: Websites like Amazon, Google Books, or Apple Books often sell eBooks. Sometimes, authors or publishers offer promotions or free periods for certain books.Authors Website Occasionally, authors provide excerpts or short stories for free on their websites. While this might not be the Necchi Sewing Machine Manual 536fb full book , it can give you a taste of the authors writing style.Subscription Services Platforms like Kindle Unlimited or Scribd offer subscription-based access to a wide range of Necchi Sewing Machine Manual 536fb eBooks, including some popular titles.

FAQs About Necchi Sewing Machine Manual 536fb Books

What is a Necchi Sewing Machine Manual 536fb PDF? A PDF (Portable Document Format) is a file format developed by Adobe that preserves the layout and formatting of a document, regardless of the software, hardware, or operating system used to view or print it. **How do I create a Necchi Sewing Machine Manual 536fb PDF?** There are several ways to create a PDF: Use software like Adobe Acrobat, Microsoft Word, or Google Docs, which often have built-in PDF creation tools. Print to PDF: Many applications and operating systems have a "Print to PDF" option that allows you to save a document as a PDF file instead of printing it on paper. Online converters: There are various online tools that can convert different file types to PDF. **How do I edit a Necchi Sewing Machine Manual 536fb PDF?** Editing a PDF can be done with software like Adobe Acrobat, which allows direct editing of text, images, and other elements within the PDF. Some free tools, like PDFescape or Smallpdf, also offer basic editing capabilities. **How do I convert a Necchi Sewing Machine Manual 536fb PDF to another file format?** There are multiple ways to convert a PDF to another format: Use online converters like Smallpdf, Zamzar, or Adobe Acrobats export feature to convert PDFs to formats like Word, Excel, JPEG, etc. Software like Adobe Acrobat, Microsoft Word, or other PDF editors may have options to export or save PDFs in different formats. **How do I password-protect a Necchi Sewing Machine Manual 536fb PDF?** Most PDF editing software allows you to add password protection. In Adobe Acrobat, for instance, you can go to "File" -> "Properties" -> "Security" to set a password to restrict access or editing capabilities. Are there any free alternatives to Adobe Acrobat for working with PDFs? Yes, there are many free alternatives for working with PDFs, such as: LibreOffice: Offers PDF editing features. PDFsam: Allows splitting, merging, and editing PDFs. Foxit Reader: Provides basic PDF viewing and editing capabilities. How do I compress a PDF file? You can use online tools like Smallpdf, ILovePDF, or desktop software like Adobe Acrobat to compress PDF files without significant quality loss. Compression reduces the file size, making it easier to share and download. Can I fill out forms in a PDF file? Yes, most PDF viewers/editors like Adobe Acrobat, Preview (on Mac), or various online tools allow you to fill out forms in PDF files by selecting text fields and entering information. Are there any restrictions when working with PDFs? Some PDFs might have restrictions set by their creator, such as password protection, editing restrictions, or print restrictions. Breaking these restrictions might require specific software or tools, which may or may not be legal depending on the circumstances and local laws.

Find Necchi Sewing Machine Manual 536fb :

recipe for meatless baked ziti
recipe for mango lassie

~~recipe for egg plant casserole~~
recipe for strawberry banana smoothies
recipe for pueblo paper bread
recipe for meatball sandwiches
~~recipe gale gand hot fudge sauce~~
recipe for veegan plum syrup
~~recipe for steak mushrooms~~
recipe for mole chicken
recipe for pecan fingers
recipe for porcupine cookies
recipe for shiny sauce
recipe for easy moussaka
recipe german chocolate rum

Necchi Sewing Machine Manual 536fb :

the notebook main title aaron zigman youtube - Sep 28 2022
web aug 16 2021 musical composition aaron zigman performance jessie black you can find more piano covers in the covers playlist bit ly 2wsgx5v you can find more soundtrack pieces in the film music
the notebook soundtrack main title by aaron zigman - Jul 27 2022
web the notebook soundtrack main title by aaron zigman
the notebook original motion picture soundtrack aaron zigman - Apr 04 2023
web jun 8 2004 the notebook which was based on nicholas sparks novel about an unusual love story spanning the 40s to the present day has a soundtrack that features aaron zigman s score and jazz and pop from 40s greats such as billie holiday duke ellington and benny goodman zigman s orchestral score ranges from the serviceable
the notebook theme aaron zigman musescore com - May 25 2022
web nov 22 2022 download and print in pdf or midi free sheet music for the notebook theme by aaron zigman arranged by greyfullbuster for piano solo
the notebook original motion picture soundtrack apple music - Feb 02 2023
web jul 12 2005 listen to the notebook original motion picture soundtrack by various artists on apple music stream songs including main title the notebook overture and more album 2005 15 songs

the notebook original motion picture soundtrack - Mar 03 2023
web jun 8 2004 listen to your favorite songs from the notebook original motion picture soundtrack by various artists now stream ad free with amazon music unlimited on mobile desktop and tablet download our mobile app now
aaron zigman youtube music - Nov 30 2022
web aaron zigman is a classically trained american composer producer arranger songwriter and musician who has scored music for films including the notebook the company men bridge to
the notebook soundtrack main title by aaron zigman youtube - Sep 09 2023
web nov 24 2009 main title the notebook licenses wmg on behalf of watertower music latinautorperf uniao brasileira de editoras de musica ubem
aaron zigman biography imdb - Jun 25 2022
web zigman combines his classical background and training with a strong knowledge of contemporary music which has enabled him to create some of hollywood s most memorable scores including the notebook bridge to terabithia the proposal flicka for colored girls flash of genius sex and the
on the lake youtube - Jun 06 2023
web mar 14 2019 provided to youtube by new line recordson the lake aaron zigmanthe notebook original motion picture soundtrack 2004 warner bros entertainment inc write
aaron zigman imdb - Jan 01 2023
web zigman combines his classical background and training with a strong knowledge of contemporary music which has enabled him to create some of hollywood s most memorable scores including the notebook bridge to terabithia the proposal flicka for colored girls flash of genius sex and the
the notebook aaron zigman youtube - Jul 07 2023
web the notebook aaron zigman marta s piano 464 subscribers subscribe 26 share 139 views 7 months ago thenotebook the notebook main theme a zigman the notebook is a 2004 american
aaron zigman the notebook original motion picture allmusic - Oct 30 2022
web jun 8 2004 aaron zigman the notebook original motion picture soundtrack album reviews songs more allmusic the notebook original motion picture soundtrack aaron zigman allmusic rating user rating 0 your rating stream or buy release date june 8 2004 duration 01 06 46 genre stage screen styles
the notebook aaron zigman played by malino piano - Mar 23 2022
web 2023 google llc wie ein einziger tag aaron zigman played by malino piano titelmusik zum film wie ein einziger tag the notebook

aaron zigman wikipedia - Aug 08 2023
web aaron zigman born january 6 1963 is a classically trained american composer producer arranger songwriter and musician who has scored music for films including the notebook the company men bridge to terabithia john q the proposal flicka for colored girls flash of genius sex the city alpha dog and escape from planet earth
the notebook soundtrack 2004 - Aug 28 2022
web jun 8 2004 the notebook soundtrack from 2004 composed by various artists aaron zigman released by watertower music in 2004 nlr39031 containing music from the notebook 2004
main title the notebook youtube music - May 05 2023
web provided to youtube by new line records main title the notebook aaron zigman the notebook original motion picture soundtrack 2004 warner bros ent
free the notebook theme by aaron zigman sheet music - Apr 23 2022
web free the notebook theme by aaron zigman sheet music download pdf or print on musescore com fall into savings get 90 off 09 58 51 view offer the notebook theme composition by aaron zigman sheet music main info scores 7 filters difficulty level available only for piano scores beginner 2 score type user scores 5 ensemble solo 2
aaron zigman the notebook 2004 youtube - Oct 10 2023
web feb 22 2009 here s zigman s absolutely lovely score for the 2004 box office smash it really is a beautiful work enjoy folks
filmtracks the notebook aaron zigman - Feb 19 2022
web sep 14 2019 the notebook aaron zigman an arthouse film from new line cinema that took everyone by surprise with its sustained box office success throughout the summer of 2004 the notebook is a tender love story spanning the generations since world war ii it features james garner as a man who reads his own stories of romance to a similarly
revising your dissertation first edition amazon com - Feb 02 2023
web oct 15 2007 there is a newer edition of this item revising your dissertation advice from leading editors 2nd second revis edition 2007 42 27 in stock the aftermath of graduate school can be particularly trying for those
revising your dissertation advice from leading editors - May 05 2023
web it will help prospective authors master writing and revision skills better understand the publishing process and increase their chances of getting their work into print this edition features
revise with a strategy the dissertation coach - Aug 28 2022
web here a few key recommendations to help you make revisions first it is often better to print a hard copy of your work and make revisions directly on the printed copy many students try to revise their dissertation while scrolling up and down a

computer screen this approach may work well if you are revising individual sentences or paragraphs

revising your dissertation advice from leading editors - Sep 09 2023

web oct 11 2004 a full spectrum of answers is revealed by the experts who here set forth with wit and good sense the arts of revising a dissertation the result provides rare insight into the process of

revising your dissertation advice from leading edi pdf - May 25 2022

web jul 17 2023 your dissertation advice from leading edi but stop happening in harmful downloads rather than enjoying a fine pdf behind a cup of coffee in the afternoon on the other hand they juggled taking into account some harmful virus inside their computer revising your dissertation advice from

revising your dissertation advice from leading editors - Apr 04 2023

web oct 15 2007 it will help prospective authors master writing and revision skills better understand the publishing process and increase their chances of getting their work into print this edition features new tips and planning tables to facilitate project scheduling and a new foreword by sandford g thatcher director of penn state university press

revising your dissertation updated edition advice from leading - Aug 08 2023

web oct 15 2007 it will help prospective authors master writing and revision skills better understand the publishing process and increase their chances of getting their work into print this edition features new tips and planning tables to facilitate project scheduling and a new foreword by sandford g thatcher director of penn state university press

revising your dissertation advice from leading edi stage gapinc - Apr 23 2022

web doing your undergraduate social science dissertation revising your dissertation finish your dissertation once and for all the book proposal book how to publish your phd expanding the american mind how to publish your phd how to complete and survive a doctoral dissertation handbook for academic authors from dissertation to book

revising your dissertation advice from leading edi 2023 - Feb 19 2022

web revising your dissertation advice from leading edi writing your dissertation in fifteen minutes a day the demise of the library school the essential guide to getting your book published completing your doctoral dissertation or master s thesis in two semesters or less on revision destination dissertation writing the successful thesis

revising your dissertation updated edition advice from leading - Mar 03 2023

web buy revising your dissertation updated edition advice from leading editors online on amazon eg at best prices fast and free shipping free returns cash on delivery available on eligible purchase revising your dissertation advice from leading editors paperback 4 7 4 7 out of 5 stars 11 ratings see all formats and editions

revising your dissertation advice from leading editors - Jul 07 2023

web oct 11 2004 paperback 9 53 20 40 16 used from 1 36 5 new from 8 40 the aftermath of graduate school can be

particularly trying for those under pressure to publish their dissertations

revising a dissertation michigan state university - Oct 30 2022

web revising a dissertation into your first book involves changes in format and usually also in content that signal your shift from student to professional here are some tips for managing that shift drop the literature review whether your field requires a formal lit review or not in the book you will want to foreground your original research

revising your dissertation advice from leading edi pdf - Mar 23 2022

web jul 27 2023 guide for everyone interested in revising their dissertation for publication chapters addressing specific fields humanities science business art etc are written by some of the leading editors from university presses around the

revising your dissertation advice from leading editors on jstor - Oct 10 2023

web she is not yet a scholar but she is entering the last phase of the journey what lies ahead is the rocky road to publication scientists as a rule do not get tenure through writing books they must rack up a suitable number of important articles in

revising your dissertation advice from leading editors search - Nov 30 2022

web revising your dissertation advice from leading editors edited by beth luey format e book published berkeley university of california press c2004 description vii 255 p 21 cm url access for iupui available on campus and off campus with authorized logon other contributors luey beth netlibrary inc notes

revising your dissertation updated edition advice from leading - Jun 06 2023

web revising your dissertation updated edition advice from leading editors by beth luey editor sanford g thatcher foreword october 2007 first edition paperback 26 95 23 00 ebook 26 95 23 00 title details rights available worldwide pages 280 isbn 9780520254015 trim size 5 5 x 8 25 illustrations 2 line illustrations 6 tables

revising your dissertation advice from leading edi 2023 - Jul 27 2022

web dissertation writers need strong practical advice as well as someone to assure them that their struggles aren t unique joan bolker midwife to more than one hundred dissertations and co founder

how to edit your dissertation students the guardian - Jan 01 2023

web apr 1 2013 review each sentence when editing such a large document it s easy to make simple mistakes make sure that you have no sentences longer than three lines and carefully review all punctuation to

revising your dissertation advice from leading edi pdf - Jun 25 2022

web jul 24 2023 revising your dissertation advice from leading edi is available in our book collection an online access to it is set as public so you can get it instantly our digital library spans in multiple countries allowing you to get the most less latency time to download

revising your dissertation advice from leading edi - Sep 28 2022

web merely said the revising your dissertation advice from leading edi is universally compatible when any devices to read the thesis and the book eleanor harman 2003 01 01 the thesis and the book a guide for first time academic authors revised and expanded in this second edition will continue to provide the best overview of the

les mÃ thodes en psychologie yumpu - Apr 12 2023

web les mÃ thodes en psychologie

mood ne demek türkçe anlamı limasollu naci - Jan 09 2023

web mood kelimesinin türkçesinin ne demek olduğunu ve anlamını İngilizce türkçe sözlüğümüzde kolayca bulabilirsiniz

psychologie cognitive moda les et ma c thodes pdf hipertexto - Jun 14 2023

web psychologie cognitive moda les et ma c thodes pdf is available in our digital library an online access to it is set as public so you can get it instantly our book servers saves in multiple countries allowing you to get the most less latency time to download any of our books like this one

psychologie cognitive moda les et ma c thodes marc j - Sep 17 2023

web exercise just what we meet the expense of under as well as evaluation psychologie cognitive moda les et ma c thodes what you later to read evolutionary psychology david buss 2015 10 02 this book examines human psychology and behavior through the lens of modern evolutionary psychology evolutionary psychology the ne w science of

psychologie cognitive moda les et ma c thodes pdf - Aug 16 2023

web aug 25 2023 along with them is this psychologie cognitive moda les et ma c thodes that can be your partner la comunicación animal carles riba 1990 dual process theories of the social mind jeffrey w sherman 2014 05 01 this volume provides an authoritative synthesis of a dynamic influential area of

mood nedir türkçe ne demek tıp terimleri sözlüğü - Mar 11 2023

web mood mood terimi tıp dilinde kullanılan latince bir kelimedir mood nedir size kısaca bunun hakkında bilgi verelim mood 12 113 kere görüntülendi

psychologie cognitive moda les et ma c thodes keith allan copy - Aug 04 2022

web psychologie cognitive moda les et ma c thodes recognizing the pretentiousness ways to get this book psychologie cognitive moda les et ma c thodes is additionally useful you have remained in right site to start getting this info get the psychologie cognitive moda les et ma c thodes colleague that we pay for here and check out the link

psychologie cognitive moda les et ma c thodes pdf uniport edu - Jan 29 2022

web jun 26 2023 as this psychologie cognitive moda les et ma c thodes it ends taking place innate one of the favored books psychologie cognitive moda les et ma c thodes collections that we have this is why you remain in the best website to look the amazing books to have the psychology of passion robert j vallerand 2015 winner of the 2017

psychologie cognitive moda les et ma c thodes uniport edu - Jul 03 2022
web psychologie cognitive moda les et ma c thodes 1 1 downloaded from uniport edu ng on september 9 2023 by guest psychologie cognitive moda les et ma c thodes right here we have countless book psychologie cognitive moda les et ma c thodes and collections to check out we additionally have the funds for variant types and plus type of
psychologie cognitive moda les et ma c thodes 2022 - Nov 07 2022
web temps aspect et modalité en français psychologie cognitive psychologie cognitive moda les et ma c thodes downloaded from ci kubesail com by guest dalton yosef les linguistiques contemporaines repères théoriques dunod Écrite par plus de soixante dix spécialistes cette nouvelle édition du livre de référence en
psychologie cognitive moda les et ma c thodes - May 01 2022
web merely said the psychologie cognitive moda les et ma c thodes is universally compatible with any devices to read handbook of self regulation of learning and performance dale h schunk 2011 05 15 self regulated learning or self regulation refers to the process whereby learners personally activate and sustain cognitions affects and
psychologie cognitive moda les et ma c thodes 2022 wrbb neu - Feb 10 2023
web psychologie cognitive moda les et ma c thodes 2020 09 29 devan tristen traité de psychologie sociale dunod au delà des craintes que peut susciter l idée d une machine pensante au delà du mythe de l automate il s agit ici d engager une réflexion pour à la fois mieux déterminer ce que le reflet
psychologie cognitive moda les et ma c thodes - Mar 31 2022
web download and install the psychologie cognitive moda les et ma c thodes it is entirely easy then since currently we extend the associate to purchase and create bargains to download and install psychologie cognitive moda les et ma c thodes fittingly simple design recommendations for intelligent tutoring systems dr robert a sottilare us
psychologie cognitive moda les et ma c thodes gavriel - Jul 15 2023
web psychologie cognitive moda les et ma c thodes recognizing the exaggeration ways to get this ebook psychologie cognitive moda les et ma c thodes is additionally useful you have remained in right site to begin getting this info get the psychologie cognitive moda les et ma c thodes partner that we present here and check out the link
psychologie cognitive moda les et ma c thodes - Feb 27 2022
web merely said the psychologie cognitive moda les et ma c thodes is universally compatible in the same way as any devices to read psychologie cognitive moda les et ma c thodes downloaded from ftp themontcalmclub com by guest julissa brody cognition et émotions publications de la sorbonne
psychologie cognitive moda les et ma c thodes pdf uniport edu - Dec 08 2022
web psychologie cognitive moda les et ma c thodes 2 10 downloaded from uniport edu ng on march 19 2023 by guest

translation precisely captures second wave positive psychology itai ivtzan 2015 10 23 positive psychology is currently equated with theory and research on the positive aspects of life the reality could not be further from the truth

mode psikolojik danışmanlık merkezi - Sep 05 2022

web mode psikolojik danışmanlık merkezi mode psikoloji bireysel psikoterapi aile ve Çift terapisi cinsel terapi grup terapisi Şema terapi bağdat caddesi İstanbul kadıköy

mod terapisi nedir psikolog aylin gündoğdu - May 13 2023

web bir bireyin farklı içsel yanlara sahip olması yaşadığı problematik duygular ve bunlarla ilgili olan durumlara bağlıdır terapist dilinde bu içsel yanlara modlar adı verilir bu modlar Çocuk modları yetişkin modları başa Çıkma modu sağlıklı yetişkin modu ve mutlu Çocuk modu olarak ayrılırlar Çocuk modlari

psychologie cognitive moda les et ma c thodes janice - Jun 02 2022

web following three perspectives are considered in depth experimental cognitive psychology cognitive science with its focus on cognitive modelling and cognitive neuropsychology with its focus on cognition following brain damage in addition and new to this edition is detailed discussion of the cognitive neuroscience

tureng mood türkçe İngilizce sözlük - Oct 06 2022

web İngilizce türkçe online sözlük tureng kelime ve terimleri çevir ve farklı aksanlarda sesli dinleme mood ruh hali subjunctive mood dilek kipi mood mizaç mood swing ne demek