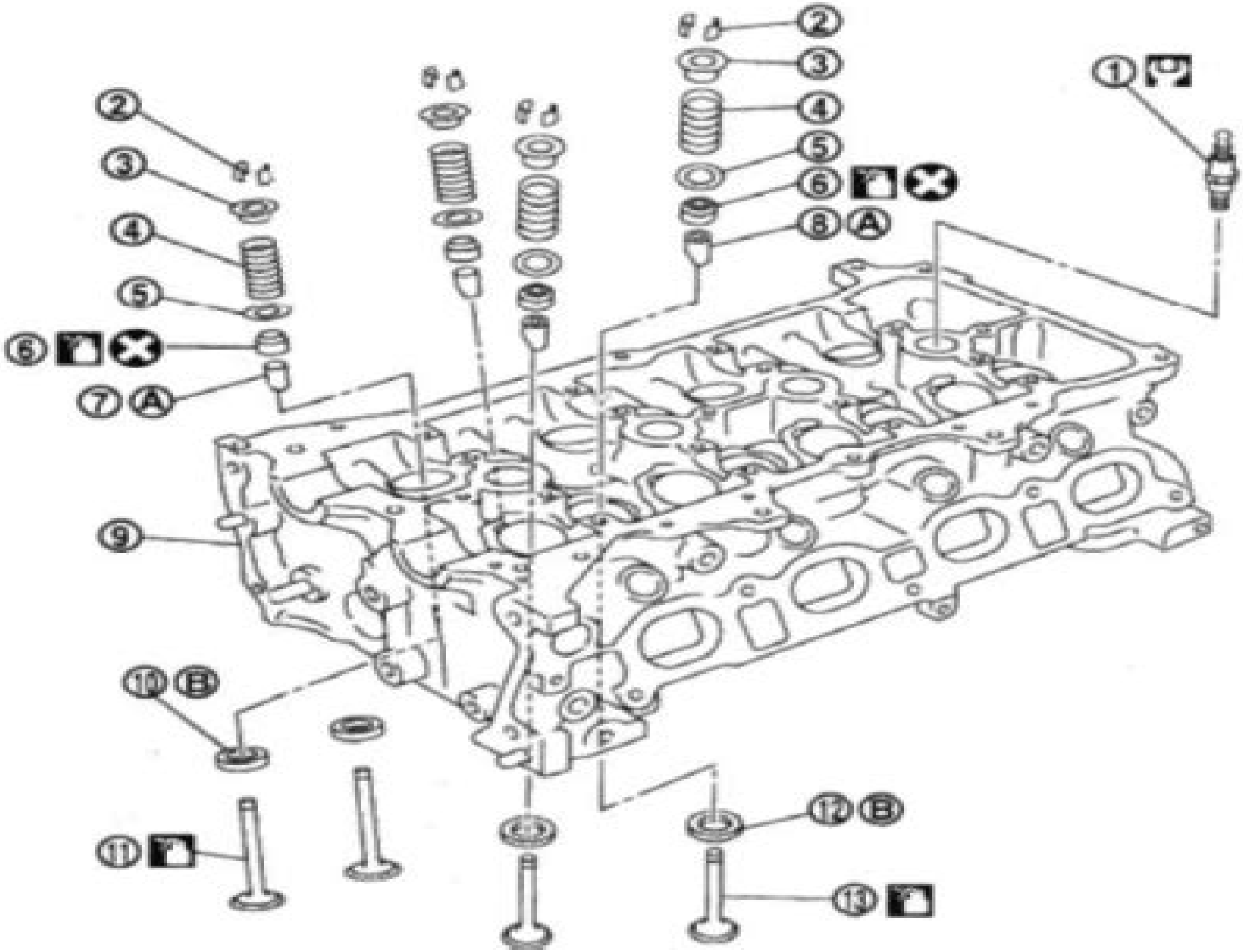
1
2
3
4
5
6
7 A
8 A
9
10 B
11
12 B
13

Nissan Elgrand Engine Diagram

JPNZ (Firm)

Nissan Elgrand Engine Diagram:

Nissan Elgrand E52 AV Monitor Owner's Manual ,2018 Nissan Elgrand 2010-2020 Owner's Manual ,2011 *Nissan Elgrand, 1997-2001* JPNZ (Firm),2007-01-01 *How Car Engine Works?* Kht Mecheng,2021-01-19 If you like cars but you don t know how they work then This educational resource contains valuable information destined to those who are passionate about cars You can easily understand and remember the process and every detail It tackles A descriptions about the main car parts Aiming to simplify the mechanical operations inside the vehicle it s supported with simple 3D or real models to enhance visualize and associate the car parts with description in a practical way and how each part works with the rest After this a four stroke engine detailed and well explained will inform you about all what you need to know we make sure that you will easily grasp the whole process

Eventually, you will very discover a other experience and completion by spending more cash. still when? do you bow to that you require to get those all needs subsequently having significantly cash? Why dont you try to get something basic in the beginning? Thats something that will guide you to comprehend even more regarding the globe, experience, some places, subsequent to history, amusement, and a lot more?

It is your extremely own period to enactment reviewing habit. among guides you could enjoy now is **Nissan Elgrand Engine Diagram** below.

https://crm.avenza.com/public/uploaded-files/Documents/Satp_Review_Guide.pdf

Table of Contents Nissan Elgrand Engine Diagram

1. Understanding the eBook Nissan Elgrand Engine Diagram
    - The Rise of Digital Reading Nissan Elgrand Engine Diagram
    - Advantages of eBooks Over Traditional Books
2. Identifying Nissan Elgrand Engine Diagram
    - Exploring Different Genres
    - Considering Fiction vs. Non-Fiction
    - Determining Your Reading Goals
3. Choosing the Right eBook Platform
    - Popular eBook Platforms
    - Features to Look for in an Nissan Elgrand Engine Diagram
    - User-Friendly Interface
4. Exploring eBook Recommendations from Nissan Elgrand Engine Diagram
    - Personalized Recommendations
    - Nissan Elgrand Engine Diagram User Reviews and Ratings
    - Nissan Elgrand Engine Diagram and Bestseller Lists
5. Accessing Nissan Elgrand Engine Diagram Free and Paid eBooks

    - Nissan Elgrand Engine Diagram Public Domain eBooks
    - Nissan Elgrand Engine Diagram eBook Subscription Services
    - Nissan Elgrand Engine Diagram Budget-Friendly Options
6. Navigating Nissan Elgrand Engine Diagram eBook Formats
    - ePub, PDF, MOBI, and More
    - Nissan Elgrand Engine Diagram Compatibility with Devices
    - Nissan Elgrand Engine Diagram Enhanced eBook Features
7. Enhancing Your Reading Experience
    - Adjustable Fonts and Text Sizes of Nissan Elgrand Engine Diagram
    - Highlighting and Note-Taking Nissan Elgrand Engine Diagram
    - Interactive Elements Nissan Elgrand Engine Diagram
8. Staying Engaged with Nissan Elgrand Engine Diagram
    - Joining Online Reading Communities
    - Participating in Virtual Book Clubs
    - Following Authors and Publishers Nissan Elgrand Engine Diagram
9. Balancing eBooks and Physical Books Nissan Elgrand Engine Diagram
    - Benefits of a Digital Library
    - Creating a Diverse Reading Collection Nissan Elgrand Engine Diagram
10. Overcoming Reading Challenges
    - Dealing with Digital Eye Strain
    - Minimizing Distractions
    - Managing Screen Time
11. Cultivating a Reading Routine Nissan Elgrand Engine Diagram
    - Setting Reading Goals Nissan Elgrand Engine Diagram
    - Carving Out Dedicated Reading Time
12. Sourcing Reliable Information of Nissan Elgrand Engine Diagram
    - Fact-Checking eBook Content of Nissan Elgrand Engine Diagram
    - Distinguishing Credible Sources
13. Promoting Lifelong Learning
    - Utilizing eBooks for Skill Development

- Exploring Educational eBooks
14. Embracing eBook Trends
    - Integration of Multimedia Elements
    - Interactive and Gamified eBooks

Nissan Elgrand Engine Diagram Introduction

Nissan Elgrand Engine Diagram Offers over 60,000 free eBooks, including many classics that are in the public domain. Open Library: Provides access to over 1 million free eBooks, including classic literature and contemporary works. Nissan Elgrand Engine Diagram Offers a vast collection of books, some of which are available for free as PDF downloads, particularly older books in the public domain. Nissan Elgrand Engine Diagram : This website hosts a vast collection of scientific articles, books, and textbooks. While it operates in a legal gray area due to copyright issues, its a popular resource for finding various publications. Internet Archive for Nissan Elgrand Engine Diagram : Has an extensive collection of digital content, including books, articles, videos, and more. It has a massive library of free downloadable books. Free-eBooks Nissan Elgrand Engine Diagram Offers a diverse range of free eBooks across various genres. Nissan Elgrand Engine Diagram Focuses mainly on educational books, textbooks, and business books. It offers free PDF downloads for educational purposes. Nissan Elgrand Engine Diagram Provides a large selection of free eBooks in different genres, which are available for download in various formats, including PDF. Finding specific Nissan Elgrand Engine Diagram, especially related to Nissan Elgrand Engine Diagram, might be challenging as theyre often artistic creations rather than practical blueprints. However, you can explore the following steps to search for or create your own Online Searches: Look for websites, forums, or blogs dedicated to Nissan Elgrand Engine Diagram, Sometimes enthusiasts share their designs or concepts in PDF format. Books and Magazines Some Nissan Elgrand Engine Diagram books or magazines might include. Look for these in online stores or libraries. Remember that while Nissan Elgrand Engine Diagram, sharing copyrighted material without permission is not legal. Always ensure youre either creating your own or obtaining them from legitimate sources that allow sharing and downloading. Library Check if your local library offers eBook lending services. Many libraries have digital catalogs where you can borrow Nissan Elgrand Engine Diagram eBooks for free, including popular titles.Online Retailers: Websites like Amazon, Google Books, or Apple Books often sell eBooks. Sometimes, authors or publishers offer promotions or free periods for certain books.Authors Website Occasionally, authors provide excerpts or short stories for free on their websites. While this might not be the Nissan Elgrand Engine Diagram full book , it can give you a taste of the authors writing style.Subscription Services Platforms like Kindle Unlimited or Scribd offer subscription-based access to a wide range of Nissan Elgrand Engine Diagram eBooks, including some popular titles.

FAQs About Nissan Elgrand Engine Diagram Books

1. Where can I buy Nissan Elgrand Engine Diagram books? Bookstores: Physical bookstores like Barnes & Noble, Waterstones, and independent local stores. Online Retailers: Amazon, Book Depository, and various online bookstores offer a wide range of books in physical and digital formats.
2. What are the different book formats available? Hardcover: Sturdy and durable, usually more expensive. Paperback: Cheaper, lighter, and more portable than hardcovers. E-books: Digital books available for e-readers like Kindle or software like Apple Books, Kindle, and Google Play Books.
3. How do I choose a Nissan Elgrand Engine Diagram book to read? Genres: Consider the genre you enjoy (fiction, non-fiction, mystery, sci-fi, etc.). Recommendations: Ask friends, join book clubs, or explore online reviews and recommendations. Author: If you like a particular author, you might enjoy more of their work.
4. How do I take care of Nissan Elgrand Engine Diagram books? Storage: Keep them away from direct sunlight and in a dry environment. Handling: Avoid folding pages, use bookmarks, and handle them with clean hands. Cleaning: Gently dust the covers and pages occasionally.
5. Can I borrow books without buying them? Public Libraries: Local libraries offer a wide range of books for borrowing. Book Swaps: Community book exchanges or online platforms where people exchange books.
6. How can I track my reading progress or manage my book collection? Book Tracking Apps: Goodreads, LibraryThing, and Book Catalogue are popular apps for tracking your reading progress and managing book collections. Spreadsheets: You can create your own spreadsheet to track books read, ratings, and other details.
7. What are Nissan Elgrand Engine Diagram audiobooks, and where can I find them? Audiobooks: Audio recordings of books, perfect for listening while commuting or multitasking. Platforms: Audible, LibriVox, and Google Play Books offer a wide selection of audiobooks.
8. How do I support authors or the book industry? Buy Books: Purchase books from authors or independent bookstores. Reviews: Leave reviews on platforms like Goodreads or Amazon. Promotion: Share your favorite books on social media or recommend them to friends.
9. Are there book clubs or reading communities I can join? Local Clubs: Check for local book clubs in libraries or community centers. Online Communities: Platforms like Goodreads have virtual book clubs and discussion groups.
10. Can I read Nissan Elgrand Engine Diagram books for free? Public Domain Books: Many classic books are available for free as theyre in the public domain. Free E-books: Some websites offer free e-books legally, like Project Gutenberg or Open Library.

Find Nissan Elgrand Engine Diagram :

~~satp review guide~~
saturn air conditioning repair
sap treasury risk management configuration guide
sap mm guide
~~sartorius cpa225d manual~~
sat writing rubric college board
sanyo microwave manual ems3553s
sanyo plc xc56 projectors owners manual
sas certification prep guide base programming for sas 9 third edition
sanyo manual tv
saturn l series shop manual
sap release implementation guide
sap garnishment configuration guide
satellite radio for harley motorcycles
sarah wilson i quite sugar

Nissan Elgrand Engine Diagram :

Shades of gray by Carolyn Reeder - Audiobook Synopsis. COURAGE WEARS MANY FACES. The Civil War may be over, but for twelve-year-old Will Page, the pain and bitterness haven't ended. Shades of Gray Audiobook, written by Carolyn Reeder Teacher and author, Carolyn Reeder vividly portrays an angry Will gradually overcoming his own loss and developing tolerance for his uncle's opposing views. The ... Shades of gray by Carolyn Reeder - Audiobook Synopsis. COURAGE WEARS MANY FACES. The Civil War may be over, but for twelve-year-old Will Page, the pain and bitterness haven't ended. Shades of Gray by Carolyn Reeder audiobook Teacher and author, Carolyn Reeder vividly portrays an angry Will gradually overcoming his own loss and developing tolerance for his uncle's opposing views. The ... Shades of Gray Audiobook, written by Carolyn Reeder Teacher and author, Carolyn Reeder vividly portrays an angry Will gradually overcoming his own loss and developing tolerance for his uncle's opposing views. The ... Shades of gray | WorldCat.org Shades of gray. Authors: Carolyn Reeder, John McDonough. Front cover image for ... Audiobook, English, 1997. Edition: View all formats and editions. Publisher ... Shades of Gray: Carolyn Reeder - Books This book is an amazing story about how a boy is getting used to a new life outside of

Winchester, VA after the civil war, when most of his family was killed ... Shades of gray : Reeder, Carolyn : Free Download, Borrow ... May 18, 2010 — At the end of the Civil War, twelve-year-old Will, having lost all his immediate family, reluctantly leaves his city home to live in the ... Shades of Gray by Reeder, Carolyn This book is an amazing story about how a boy is getting used to a new life outside of Winchester, VA after the civil war, when most of his family was killed ... Shades of Gray | Book by Carolyn Reeder, Tim O'Brien Shades of Gray by Carolyn Reeder - In the aftermath of the Civil War, recently orphaned Will must start a new life and overcome his prejudices. Physics 3rd Edition Textbook Solutions Access Physics 3rd Edition solutions now. Our solutions are written by Chegg experts so ...
ISBN-13:9780131963924ISBN:0131963929Authors:James S. Walker Rent | Buy. Physics - 3rd Edition - Solutions and Answers Find step-by-step solutions and answers to Physics - 9780131536319, as well ... Physics 3rd Edition by Walker. More textbook info. Walker. ISBN: 9780131536319. Instructor's Solutions Manual for Physics, Vol. 2, 3rd Edition Instructor's Solutions Manual for Physics, Vol. 2, 3rd Edition [James S. Walker, Kenneth L. Menningen, Michael B. Ottinger, James S. Walker] on Amazon.com. Instructor's solutions manual [to accompany] Physics, third ... Instructor's solutions manual [to accompany] Physics, third edition, James S. Walker. Authors: Kenneth L. Menningen, Michael B. Ottinger, James S. Walker. Instructor's Solutions Manual for Physics, Vol. 2, 3rd Edition ... Instructor's Solutions Manual for Physics, Vol. 2, 3rd Edition by James S. Walker; Kenneth L. Menningen; Michael B. Ottinger - ISBN 10: 013153632X - ISBN ... Physics Solution Manual Author: James S. Walker. 5638 solutions available. See all 4th Editions ... Physics | 3rd Edition. Author: James S. Walker. ISBN13:9780131963924. Textbook ... Instructor's Solutions Manual for Physics, Volume 1, Third ... Instructor's Solutions Manual for Physics, Volume 1, Third Edition by James S. Walker. (Paperback 9780131851108) Physics Instructor's Solutions Manual 2007 Instructor's Solutions Manual to Accompany Walker's Physics Third Edition Volume One (P) by Kenneth L. Menningen, Michael B. Ottinger, & James S. Walker ... Solutions Manual to Accompany Physics for Scientists and ... Solutions Manual to Accompany Physics for Scientists and Engineers, Third Edition by Paul A. Tipler, Volume 2. Front Cover. James S. Walker. Worth Publishers ... Physics, Volume 1, Student Study Guide The print study guide provides the following for each chapter: Objectives Warm-Up Questions from the Just-in-Time Teaching method by Gregor Novak and Andrew ... The Kitchen Debate and Cold War Consumer Politics: A ... Amazon.com: The Kitchen Debate and Cold War Consumer Politics: A Brief History with Documents (The Bedford Series in History and Culture): 9780312677107: ... The Kitchen Debate and Cold War Consumer Politics The introduction situates the Debate in a survey of the Cold War, and an unprecedented collection of primary-source selections—including Soviet accounts never ... The Kitchen Debate and Cold War Consumer Politics This innovative treatment of the Kitchen Debate reveals the event not only as a symbol of U.S. -Soviet military and diplomatic rivalry but as a battle over ... The Kitchen Debate and Cold War consumer politics The Kitchen Debate and Cold War consumer politics : a brief history with documents / Shane Hamilton, Sarah Phillips · Object Details · Footer logo. Link to ...

The Kitchen Debate and Cold War Consumer Politics: A ... The Kitchen Debate and Cold War Consumer Politics: A Brief History with Documents (The Bedford Series in History and Culture) - Softcover · Phillips, Sarah T.; ... The Nixon-Khrushchev Kitchen Debate The Kitchen Debate and Cold War Consumer Politics: A Brief History with Documents. New York: Macmillan, 2014. Save to My Library Share. Duration, 30 min. The kitchen debate and cold war consumer politics : : a brief... The kitchen debate and cold war consumer politics: a brief history with documents (Book) ... Series: Bedford series in history and culture. Published: Boston : ... The Kitchen Debate and Cold War Consumer Politics Jan 3, 2014 — The Kitchen Debate and Cold War Consumer Politics: A Brief History with Documents (Paperback) ; ISBN: 9780312677107 ; ISBN-10: 0312677103 The Kitchen Debate and Cold War Consumer Politics The Kitchen Debate and Cold War Consumer Politics: A Brief History with Documents is written by Sarah T. Phillips; Shane Hamilton and published by ... The Kitchen Debate and Cold War Consumer Politics by SL Hamilton · 2014 · Cited by 25 — Hamilton, S. L., & Phillips, S. (2014). The Kitchen Debate and Cold War Consumer Politics: A Brief History with Documents. Bedford/St. Martin's Press. Hamilton, ...