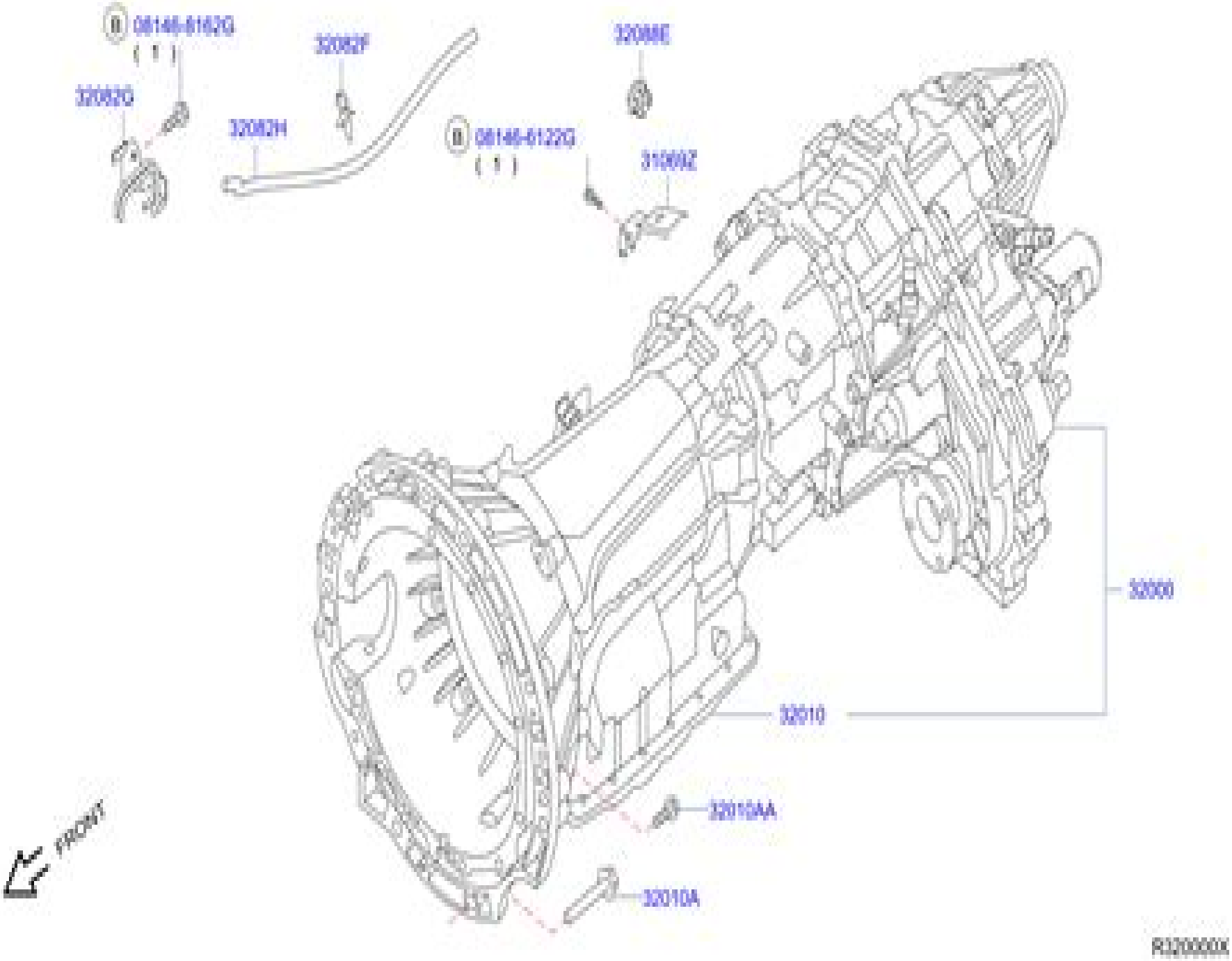
08146-6162G
(1)
32082G
32082F
32082H
08146-6122G
(1)
32088E
31009Z
32000
32010
32010AA
32010A
FRONT
R320000X

Nissan Auto Manual Transmission

Arturo Cuomo

Nissan Auto Manual Transmission:

Right here, we have countless book **Nissan Auto Manual Transmission** and collections to check out. We additionally have the funds for variant types and next type of the books to browse. The standard book, fiction, history, novel, scientific research, as with ease as various other sorts of books are readily nearby here.

As this Nissan Auto Manual Transmission, it ends going on inborn one of the favored ebook Nissan Auto Manual Transmission collections that we have. This is why you remain in the best website to look the amazing books to have.

https://crm.avenza.com/book/book-search/fetch.php/rick%20atkinson%203rd%20book.pdf

Table of Contents Nissan Auto Manual Transmission

1. Understanding the eBook Nissan Auto Manual Transmission
    - The Rise of Digital Reading Nissan Auto Manual Transmission
    - Advantages of eBooks Over Traditional Books
2. Identifying Nissan Auto Manual Transmission
    - Exploring Different Genres
    - Considering Fiction vs. Non-Fiction
    - Determining Your Reading Goals
3. Choosing the Right eBook Platform
    - Popular eBook Platforms
    - Features to Look for in an Nissan Auto Manual Transmission
    - User-Friendly Interface
4. Exploring eBook Recommendations from Nissan Auto Manual Transmission
    - Personalized Recommendations
    - Nissan Auto Manual Transmission User Reviews and Ratings
    - Nissan Auto Manual Transmission and Bestseller Lists
5. Accessing Nissan Auto Manual Transmission Free and Paid eBooks
    - Nissan Auto Manual Transmission Public Domain eBooks

    - Nissan Auto Manual Transmission eBook Subscription Services
    - Nissan Auto Manual Transmission Budget-Friendly Options
6. Navigating Nissan Auto Manual Transmission eBook Formats
    - ePub, PDF, MOBI, and More
    - Nissan Auto Manual Transmission Compatibility with Devices
    - Nissan Auto Manual Transmission Enhanced eBook Features
7. Enhancing Your Reading Experience
    - Adjustable Fonts and Text Sizes of Nissan Auto Manual Transmission
    - Highlighting and Note-Taking Nissan Auto Manual Transmission
    - Interactive Elements Nissan Auto Manual Transmission
8. Staying Engaged with Nissan Auto Manual Transmission
    - Joining Online Reading Communities
    - Participating in Virtual Book Clubs
    - Following Authors and Publishers Nissan Auto Manual Transmission
9. Balancing eBooks and Physical Books Nissan Auto Manual Transmission
    - Benefits of a Digital Library
    - Creating a Diverse Reading Collection Nissan Auto Manual Transmission
10. Overcoming Reading Challenges
    - Dealing with Digital Eye Strain
    - Minimizing Distractions
    - Managing Screen Time
11. Cultivating a Reading Routine Nissan Auto Manual Transmission
    - Setting Reading Goals Nissan Auto Manual Transmission
    - Carving Out Dedicated Reading Time
12. Sourcing Reliable Information of Nissan Auto Manual Transmission
    - Fact-Checking eBook Content of Nissan Auto Manual Transmission
    - Distinguishing Credible Sources
13. Promoting Lifelong Learning
    - Utilizing eBooks for Skill Development
    - Exploring Educational eBooks

14. Embracing eBook Trends
    - Integration of Multimedia Elements
    - Interactive and Gamified eBooks

Nissan Auto Manual Transmission Introduction

In the digital age, access to information has become easier than ever before. The ability to download Nissan Auto Manual Transmission has revolutionized the way we consume written content. Whether you are a student looking for course material, an avid reader searching for your next favorite book, or a professional seeking research papers, the option to download Nissan Auto Manual Transmission has opened up a world of possibilities. Downloading Nissan Auto Manual Transmission provides numerous advantages over physical copies of books and documents. Firstly, it is incredibly convenient. Gone are the days of carrying around heavy textbooks or bulky folders filled with papers. With the click of a button, you can gain immediate access to valuable resources on any device. This convenience allows for efficient studying, researching, and reading on the go. Moreover, the cost-effective nature of downloading Nissan Auto Manual Transmission has democratized knowledge. Traditional books and academic journals can be expensive, making it difficult for individuals with limited financial resources to access information. By offering free PDF downloads, publishers and authors are enabling a wider audience to benefit from their work. This inclusivity promotes equal opportunities for learning and personal growth. There are numerous websites and platforms where individuals can download Nissan Auto Manual Transmission. These websites range from academic databases offering research papers and journals to online libraries with an expansive collection of books from various genres. Many authors and publishers also upload their work to specific websites, granting readers access to their content without any charge. These platforms not only provide access to existing literature but also serve as an excellent platform for undiscovered authors to share their work with the world. However, it is essential to be cautious while downloading Nissan Auto Manual Transmission. Some websites may offer pirated or illegally obtained copies of copyrighted material. Engaging in such activities not only violates copyright laws but also undermines the efforts of authors, publishers, and researchers. To ensure ethical downloading, it is advisable to utilize reputable websites that prioritize the legal distribution of content. When downloading Nissan Auto Manual Transmission, users should also consider the potential security risks associated with online platforms. Malicious actors may exploit vulnerabilities in unprotected websites to distribute malware or steal personal information. To protect themselves, individuals should ensure their devices have reliable antivirus software installed and validate the legitimacy of the websites they are downloading from. In conclusion, the ability to download Nissan Auto Manual Transmission has transformed the way we access information. With the convenience, cost-effectiveness, and accessibility it offers, free PDF downloads have become a popular choice for students, researchers, and

book lovers worldwide. However, it is crucial to engage in ethical downloading practices and prioritize personal security when utilizing online platforms. By doing so, individuals can make the most of the vast array of free PDF resources available and embark on a journey of continuous learning and intellectual growth.

FAQs About Nissan Auto Manual Transmission Books

What is a Nissan Auto Manual Transmission PDF? A PDF (Portable Document Format) is a file format developed by Adobe that preserves the layout and formatting of a document, regardless of the software, hardware, or operating system used to view or print it. **How do I create a Nissan Auto Manual Transmission PDF?** There are several ways to create a PDF: Use software like Adobe Acrobat, Microsoft Word, or Google Docs, which often have built-in PDF creation tools. Print to PDF: Many applications and operating systems have a "Print to PDF" option that allows you to save a document as a PDF file instead of printing it on paper. Online converters: There are various online tools that can convert different file types to PDF. **How do I edit a Nissan Auto Manual Transmission PDF?** Editing a PDF can be done with software like Adobe Acrobat, which allows direct editing of text, images, and other elements within the PDF. Some free tools, like PDFescape or Smallpdf, also offer basic editing capabilities. **How do I convert a Nissan Auto Manual Transmission PDF to another file format?** There are multiple ways to convert a PDF to another format: Use online converters like Smallpdf, Zamzar, or Adobe Acrobats export feature to convert PDFs to formats like Word, Excel, JPEG, etc. Software like Adobe Acrobat, Microsoft Word, or other PDF editors may have options to export or save PDFs in different formats. **How do I password-protect a Nissan Auto Manual Transmission PDF?** Most PDF editing software allows you to add password protection. In Adobe Acrobat, for instance, you can go to "File" -> "Properties" -> "Security" to set a password to restrict access or editing capabilities. Are there any free alternatives to Adobe Acrobat for working with PDFs? Yes, there are many free alternatives for working with PDFs, such as: LibreOffice: Offers PDF editing features. PDFsam: Allows splitting, merging, and editing PDFs. Foxit Reader: Provides basic PDF viewing and editing capabilities. How do I compress a PDF file? You can use online tools like Smallpdf, ILovePDF, or desktop software like Adobe Acrobat to compress PDF files without significant quality loss. Compression reduces the file size, making it easier to share and download. Can I fill out forms in a PDF file? Yes, most PDF viewers/editors like Adobe Acrobat, Preview (on Mac), or various online tools allow you to fill out forms in PDF files by selecting text fields and entering information. Are there any restrictions when working with PDFs? Some PDFs might have restrictions set by their creator, such as password protection, editing restrictions, or print restrictions. Breaking these restrictions might require specific software or tools, which may or may not be legal depending on the circumstances and local laws.

Find Nissan Auto Manual Transmission :

rick atkinson 3rd book
reznor unit parts manual
richard hittleman introduction to yoga
review stoichiometry section 1 short answer
ricoh aficio sp c411dn user manual
rich wolf willing woman paranormal billionaire futa erotica english edition
riccar serger guide
~~richland parish school board louisiana~~
ri blue card test study guide
richard l duble book
revue francaise de science politique volume xi no 1 4 1961 kompletter jahrgang
rhubarb care and maintenance
ricoh aficio mp 3350b manual
richard m roberts book
rheem manual model rgdj

Nissan Auto Manual Transmission :

my first chess book 35 easy and fun chess based activities for - Sep 24 2022
web find many great new used options and get the best deals for my first chess book 35 easy and fun chess based activities for children aged 7 years by jessica e martin paperback 2014 at the best online prices at ebay free delivery for many products
my first chess book 35 easy and fun chess based activities for - Dec 28 2022
web abebooks com my first chess book 35 easy and fun chess based activities for children aged 7 years 9781782491576 by martin jessica e and a great selection of similar new used and collectible books available now at great prices
my first chess book 35 easy and fun chess based activities for - Jul 23 2022
web my first chess book 35 easy and fun chess based activities for children aged 7 years by jessica e martin write the first customer review filter results shipping eligible for free shipping expedited shipping available chess
my first chess book 35 easy and fun chess based activities for - Feb 27 2023
web buy my first chess book 35 easy and fun chess based activities for children by jessica prescott 2014 07 01 by isbn from

amazon s book store everyday low prices and free delivery on eligible orders

my first chess book 35 easy and fun chess based a pdf - Mar 19 2022

web my first chess book 35 easy and fun chess based a checkmate the kids book of chess first book of chess first encyclopedia of seas oceans chess for kids my first chess book 35 easy and fun chess based a 3 3 based on ten years of experience with thousands of pupils at the prize winning charlotte chess center all problems are

full version my first chess book 35 easy and fun chess based - Aug 24 2022

web jan 16 2020 go drivelive club book 1782491570 learn how to play chess the world s most popular board game chess is easy to learn and anyone can play it jessica e prescott teaches you how you can get good at it and start winning improve your skills through 35 fun activities this isn t just a textbook about the rules of the game

my first chess book 35 easy and fun chess based activities for - Nov 26 2022

web buy my first chess book 35 easy and fun chess based activities for children aged 7 years by martin jessica e online on amazon ae at best prices fast and free shipping free returns cash on delivery available on eligible purchase

learn to play chess 35 easy and fun chess activities for children - Oct 26 2022

web the book generally emphasizes fun and real but healthy competition as well as since it is chess concentration and self discipline i was pleased how much content there is it s about 125 mostly full pages about half illustrations and

my first chess book 35 easy and fun chess based activities for - Mar 31 2023

web my first chess book 35 easy and fun chess based activities for children by jessica prescott 2014 paperback on amazon com free shipping on qualifying offers my first chess book 35 easy and fun chess based activities for children by jessica prescott 2014 paperback

my first chess book 35 easy and fun chess based activities for - Sep 05 2023

web my first chess book 35 easy and fun chess based activities for children aged 7 years jessica e prescott amazon com tr kitap

download read my first chess book 35 easy and fun chess based - Jun 21 2022

web pdf download my first chess book 35 easy and fun chess based activities for children aged 7 years ebook read online link read download and more info

my first chess book 35 easy and fun chess based activities for - May 01 2023

web improve your skills through 35 fun activities this isn t just a textbook about the rules of the game why not have a game of pawn football pawns line up at their starting rank and race to the other side or do the queen dance make a checkmate using only a

my first chess book 35 easy and fun chess based activities for - Jul 03 2023

web jul 10 2014 buy my first chess book 35 easy and fun chess based activities for children aged 7 years by martin jessica e isbn 9781782491576 from amazon s book store everyday low prices and free delivery on eligible orders

my first chess book 35 easy and fun chess based a 2023 - Feb 15 2022

web my first chess book 35 easy and fun chess based a 1 my first chess book 35 easy and fun chess based a my first book of chess tactics kasparov teaches chess first chess openings my first chess book the grand chessboard reclaiming the curriculum chess for kids your first chess lessons capablanca x3 everyone s first chess

my first chess book 35 easy and fun chess based activities for - Oct 06 2023

web jul 10 2014 my first chess book 35 easy and fun chess based activities for children aged 7 years paperback july 10 2014 by jessica e martin author 4 4 4 4 out of 5 stars 67 ratings

my first chess book 35 easy and fun chess based activities for - Jun 02 2023

web learn how to play chess the world s most popular board game chess is easy to learn and anyone can play it jessica e prescott teaches you how you can get good at it and start winning improve your skills through 35 fun activities this isn t just a textbook about the rules of the game

beginner chess lessons chess com - May 21 2022

web the alapin variation of the sicilian defense is a logical attempt for white to avoid the complexities of the open sicilian white aims to control the center but risks falling behind in development learn the key ideas in this important variation for both sides m chess com coach 3 lessons beginner

my first chess book 35 easy and fun chess activities for children - Aug 04 2023

web feb 17 2023 my first chess book 35 easy and fun chess activities for children aged 7 years prescott jessica e author free download borrow and streaming internet archive

my first chess book 35 easy and fun chess based activities - Apr 19 2022

web kindly say the my first chess book 35 easy and fun chess based activities for children aged 7 years is universally compatible with any devices to read improve your chess tactics jakov neishstadt 2014 03 07 the best advice for chess players who want to improve quickly is get better at tactics

my first chess book 35 easy and fun chess based activities for - Jan 29 2023

web jul 10 2014 my first chess book 35 easy and fun chess based activities for children aged 7 years martin jessica e 9781782491576 books amazon ca

economic interdependence and war princeton studies in - Aug 08 2022

web economic interdependence and war offers sweeping new insights into historical and contemporary global politics and the actual nature of democratic versus economic

economic interdependence and war princeton studies in - Sep 09 2022
web economic interdependence and war offers sweeping new insights into historical and contemporary global politics and the actual nature of democratic versus economic
economic interdependence and war princeton studies in - May 05 2022
web economic interdependence and war offers sweeping new insights into historical and contemporary global politics and the actual nature of democratic versus economic
economic interdependence and war princeton - Oct 22 2023
web nov 2 2014 the book offers sweeping new insights into historical and contemporary global politics and the actual nature of democratic versus economic peace keywords
one theory of economic interdependence and war oxford - Mar 15 2023
web economic interdependence and war dale c copeland contents front matter introduction one theory of economic interdependence and war two quantitative
economic interdependence and war princeton studies in - Nov 11 2022
web buy economic interdependence and war princeton studies in international history and politics 148 by copeland dale c isbn 9780691161587 from amazon s book
princeton studies in international history and politics - Aug 20 2023
web the princeton studies in international history and politics series publishes preeminent work in international relations focusing on books that have a historical dimension and
economic interdependence and war princeton studies in - Oct 10 2022
web economic interdependence and war princeton studies in international history and politics 148 by copeland dale c isbn 10 0691161593 isbn 13 9780691161594
european great power politics 1790 1854 economic - Dec 12 2022
web nov 2 2014 economic interdependence and war princeton studies in international history and politics book 148 kindle edition by copeland dale c download it once
economic interdependence and war princeton studies in - Feb 02 2022
web get economic interdependence and war princeton studies in international history and politics dale c copeland epub mobi azw3 and pdf is growing economic
pdf economic interdependence and war princeton studies in - Apr 16 2023
web abstract this chapter constitutes a more in depth look at both the existing literature on interdependence and war and the theory of trade expectations itself

introduction economic interdependence and war princeton - Jun 18 2023
web buy economic interdependence and war princeton studies in international history and politics 148 illustrated by copeland dale c isbn 9780691161594 from
economic interdependence and war princeton studies in - Jul 07 2022
web moving beyond the stale liberal realist debate economic interdependence and war lays out a dynamic theory of expectations that shows under what specific conditions interstate
economic interdependence and war princeton scholarship - Sep 21 2023
web book 2022 violent victors why bloodstained parties win postwar elections sarah zukerman daly volume 196 in this series cite book 1993 economic discrimination
economic interdependence and war princeton studies in - Nov 30 2021

princeton studies in international history and politics - Jul 19 2023
web subject international relations does economic interdependence between great powers have a significant effect on the probability of war between them and if so does it
economic interdependence and war princeton studies in - May 17 2023
web economic interdependence and war princeton studies in international history and politics power and plenty aug 01 2021 international trade has shaped the modern
implications of the argument economic interdependence and - Feb 14 2023
web jstor is a digital library of academic journals books and primary sources
economic interdependence and war princeton studies in - Jun 06 2022
web economic interdependence and war princeton studies in international history and politics book 148 ebook copeland dale c amazon co uk books
economic interdependence and war princeton studies in - Mar 03 2022
web economic interdependence and war princeton studies in international history and politics 148 paperback 2 november 2014 by dale c copeland author 4 3 17
economic interdependence and war princeton studies in - Apr 04 2022
web economic interdependence and war princeton studies in international history and politics by dale c copeland paperback 30 99 when purchased online in stock add
princeton studies in international history and politics on jstor - Jan 13 2023
web this chapter explores the relative importance of economic interdependence and trade expectations on the policies of the

european great powers from 1790 to the outbreak of

economic interdependence and war princeton studies in - Jan 01 2022

web economic interdependence and war princeton studies in international history and politics gebundene ausgabe 2 november 2014 englisch ausgabe von dale c

les dernia res paroles des condamna c s a mort download - Sep 02 2022

web les dernia res paroles des condamna c s a mort les dernières paroles des condamnés à mort la vie et les dernières paroles de la mort de sénèque discours

exhorte israël à cesser de bombarder des civils à gaza le - Feb 24 2022

web nov 11 2023 le président français emmanuel macron exhorte israël à cesser les bombardements qui tuent des civils à gaza dans un entretien accordé à la bbc diffusé

les dernia res paroles des condamna c s a mort pdf - Oct 03 2022

web les dernia res paroles des condamna c s a mort recueil des arrêts et décisions may 29 2021 histoire des communes lombardes depuis leur origine jusqu à la fin du

les dernia res paroles des condamna c s a mort download - Oct 15 2023

web les dernia res paroles des condamna c s a mort abrégé de l histoire ecclésiastique nov 20 2020 histoire de l arianisme depuis sa naissance jusqu à sa fin oct 20 2020

les dernia res paroles des condamna c s a mort pdf c - Nov 04 2022

web this les dernia res paroles des condamna c s a mort pdf as one of the most functioning sellers here will unquestionably be accompanied by the best options to

read free les dernia res paroles des condamna c s a mort - Feb 07 2023

web les dernia res paroles des condamna c s a mort histoire de l arianisme depuis sa naissance jusqu à sa fin apr 29 2020 the legal news dec 18 2021 mémoires de

death sentence wikipédia - Jan 26 2022

web death sentence est le titre d exploitation international du western spaghetti sentence de mort de mario lanfranchi en 1968 death sentence le titre original de peine de mort

free les dernia res paroles des condamna c s a mort - Jan 06 2023

web les dernia res paroles des condamna c s a mort non louis xvii n est pas mort au temple réfutation de l ouvrage de m a de beauchesne louis xvii sa vie son

les dernia res paroles des condamna c s a mort pdf - Jun 30 2022

web jun 12 2023 les dernia res paroles des condamna c s a mort pdf web les dernia res paroles des condamna c s a mort 1

les dernia res paroles des condamna c s a

download free les dernia res paroles des condamna c s a mort - Mar 08 2023

web les dernia res paroles des condamna c s a mort recueil des pièces imprimées par ordre de la chambre des représentants jun 27 2023 continuation des annales

les dernières paroles des condamnés à mort by stephane - Jul 12 2023

web bienvenue sur le dernier rivage l homme face a la mort réunis pour la première fois voici les derniers mots de centaines de condamnés à mort exécutés à

les dernia res paroles des condamna c s a mort - Apr 09 2023

web les dernia res paroles des condamna c s a mort introduction À l histoire du buddisme indien jan 28 2021 trois notes de blues pour un fado nov 25 2020

les dernia res paroles des condamna c s a mort uniport edu - Apr 28 2022

web les dernia res paroles des condamna c s a mort 2 4 downloaded from uniport edu ng on may 20 2023 by guest traité des infractions de la parole de l écriture et de la presse

les dernia res paroles des condamna c s a mort michel - Jun 11 2023

web recognizing the pretentiousness ways to get this books les dernia res paroles des condamna c s a mort is additionally useful you have remained in right site to begin

top 10 des derniers mots de condamnés à mort un top plein de vie - Mar 28 2022

web dec 27 2019 top 10 des derniers mots de condamnés à mort un top plein de vie bon allez noël c était bien sympa et tout mais on va arrêter un peu avec le bonheur des

les dernia res paroles des condamna c s a mort - May 10 2023

web enter the realm of les dernia res paroles des condamna c s a mort a mesmerizing literary masterpiece penned by a distinguished author guiding readers on a profound

les dernières paroles des condamnés à mort goodreads - Aug 13 2023

web jan 1 2016 plus grand spécialiste mondial des tueurs en série auteur d une cinquantaine d ouvrages traduits dans vingt langues stéphane bourgoin a interviewé à ce jour plus

les dernia res paroles des condamna c s a mort pdf full pdf - Dec 05 2022

web les dernia res paroles des condamna c s a mort pdf pages 2 4 les dernia res paroles des condamna c s a mort pdf upload arnold l ferguson 2 4 downloaded

les dernia res paroles des condamna c s a mort - Sep 14 2023

web les dernia res paroles des condamna c s a mort l usance de saintonge entre mer et charente collige des anciens

manuscrits auec deux traits des secondes noces du

downloadable free pdfs les dernia res paroles des - Aug 01 2022

web les dernia res paroles des condamna c s a mort histoire du christianisme depuis son origine jusqu à nos jours dec 20 2020 histoire contemporaine d angleterre

dernières paroles de condamnés peine de mort paris match - May 30 2022

web oct 10 2014 pour en finir avec la peine de mort a 6h du matin le prisonnier est sorti de sa cellule et conduit à la chambre d exécution il est attaché sur une table visage

les dernia res paroles des condamna c s a mort pdf - Dec 25 2021

web les dernia res paroles des condamna c s a mort 5 5 si un jour vous vous retrouvez au chevet d une personne qui vous est chère et échangez avec elle une dernière

les dernia res paroles des condamna c s a mort vincent - Oct 23 2021

web again they juggled behind some harmful virus inside their computer les dernia res paroles des condamna c s a mort is clear in our digital library an online right of entry

les dernia res paroles des condamna c s a mort pdf - Nov 23 2021

web les dernieres paroles de monsieur de chastillon tué à charenton le lundy huictième fevrier 1649 la mort et les dernières paroles de sénèque la mort et les dernieres