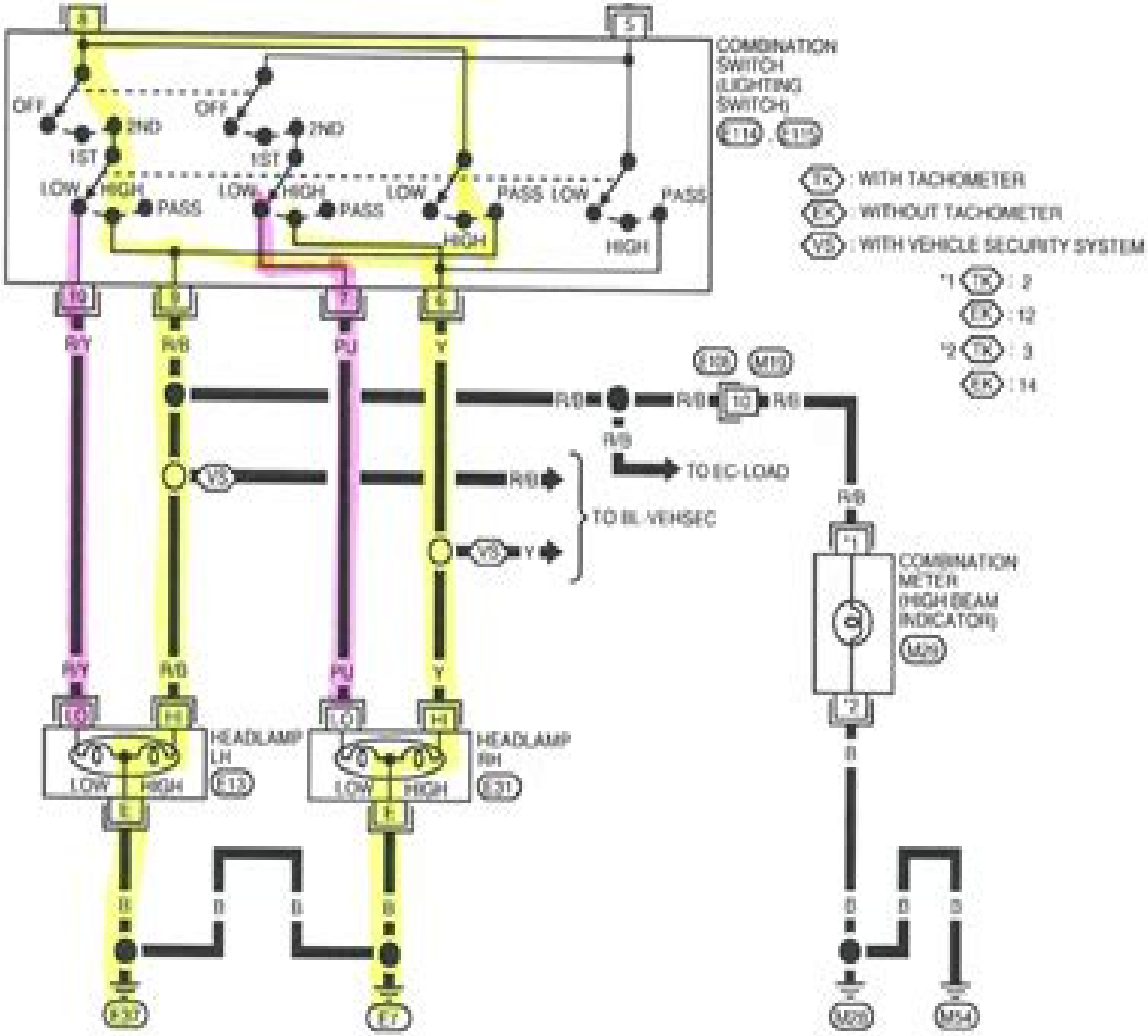
COMBINATION SWITCH (LIGHTING SWITCH)
E18 , E19
OFF
2ND
1ST
LOW
HIGH
PASS
TK : WITH TACHOMETER
EK : WITHOUT TACHOMETER
VS : WITH VEHICLE SECURITY SYSTEM
*1 TK : 2
EK : 12
*2 TK : 3
EK : 14
R/Y
R/B
PU
Y
E18
M19
R/B
TO EC-LOAD
VS
TO BL VEHSEC
COMBINATION METER (HIGH BEAM INDICATOR)
M26
HEADLAMP LH
E13
HEADLAMP RH
E21
B
E37
E7
M28
M34

Nissan 14ignition Wiring

Michael Seilmaier

Nissan 14ignition Wiring:

The book delves into Nissan 14ignition Wiring. Nissan 14ignition Wiring is a crucial topic that must be grasped by everyone, ranging from students and scholars to the general public. The book will furnish comprehensive and in-depth insights into Nissan 14ignition Wiring, encompassing both the fundamentals and more intricate discussions.

1. This book is structured into several chapters, namely:
    - Chapter 1: Introduction to Nissan 14ignition Wiring
    - Chapter 2: Essential Elements of Nissan 14ignition Wiring
    - Chapter 3: Nissan 14ignition Wiring in Everyday Life
    - Chapter 4: Nissan 14ignition Wiring in Specific Contexts
    - Chapter 5: Conclusion
2. In chapter 1, the author will provide an overview of Nissan 14ignition Wiring. The first chapter will explore what Nissan 14ignition Wiring is, why Nissan 14ignition Wiring is vital, and how to effectively learn about Nissan 14ignition Wiring.
3. In chapter 2, the author will delve into the foundational concepts of Nissan 14ignition Wiring. The second chapter will elucidate the essential principles that need to be understood to grasp Nissan 14ignition Wiring in its entirety.
4. In chapter 3, the author will examine the practical applications of Nissan 14ignition Wiring in daily life. The third chapter will showcase real-world examples of how Nissan 14ignition Wiring can be effectively utilized in everyday scenarios.
5. In chapter 4, this book will scrutinize the relevance of Nissan 14ignition Wiring in specific contexts. This chapter will explore how Nissan 14ignition Wiring is applied in specialized fields, such as education, business, and technology.
6. In chapter 5, the author will draw a conclusion about Nissan 14ignition Wiring. This chapter will summarize the key points that have been discussed throughout the book.
   This book is crafted in an easy-to-understand language and is complemented by engaging illustrations. This book is highly recommended for anyone seeking to gain a comprehensive understanding of Nissan 14ignition Wiring.

https://crm.avenza.com/data/Resources/default.aspx/Pearson%20Successnet%20Answer%20Sheet%20Algebra%201.pdf

Table of Contents Nissan 14ignition Wiring

1. Understanding the eBook Nissan 14ignition Wiring

- The Rise of Digital Reading Nissan 14ignition Wiring
- Advantages of eBooks Over Traditional Books

2. Identifying Nissan 14ignition Wiring
    - Exploring Different Genres
    - Considering Fiction vs. Non-Fiction
    - Determining Your Reading Goals
3. Choosing the Right eBook Platform
    - Popular eBook Platforms
    - Features to Look for in an Nissan 14ignition Wiring
    - User-Friendly Interface
4. Exploring eBook Recommendations from Nissan 14ignition Wiring
    - Personalized Recommendations
    - Nissan 14ignition Wiring User Reviews and Ratings
    - Nissan 14ignition Wiring and Bestseller Lists
5. Accessing Nissan 14ignition Wiring Free and Paid eBooks
    - Nissan 14ignition Wiring Public Domain eBooks
    - Nissan 14ignition Wiring eBook Subscription Services
    - Nissan 14ignition Wiring Budget-Friendly Options
6. Navigating Nissan 14ignition Wiring eBook Formats
    - ePub, PDF, MOBI, and More
    - Nissan 14ignition Wiring Compatibility with Devices
    - Nissan 14ignition Wiring Enhanced eBook Features
7. Enhancing Your Reading Experience
    - Adjustable Fonts and Text Sizes of Nissan 14ignition Wiring
    - Highlighting and Note-Taking Nissan 14ignition Wiring
    - Interactive Elements Nissan 14ignition Wiring
8. Staying Engaged with Nissan 14ignition Wiring
    - Joining Online Reading Communities
    - Participating in Virtual Book Clubs
    - Following Authors and Publishers Nissan 14ignition Wiring

9. Balancing eBooks and Physical Books Nissan 14ignition Wiring
    - Benefits of a Digital Library
    - Creating a Diverse Reading Collection Nissan 14ignition Wiring
10. Overcoming Reading Challenges
    - Dealing with Digital Eye Strain
    - Minimizing Distractions
    - Managing Screen Time
11. Cultivating a Reading Routine Nissan 14ignition Wiring
    - Setting Reading Goals Nissan 14ignition Wiring
    - Carving Out Dedicated Reading Time
12. Sourcing Reliable Information of Nissan 14ignition Wiring
    - Fact-Checking eBook Content of Nissan 14ignition Wiring
    - Distinguishing Credible Sources
13. Promoting Lifelong Learning
    - Utilizing eBooks for Skill Development
    - Exploring Educational eBooks
14. Embracing eBook Trends
    - Integration of Multimedia Elements
    - Interactive and Gamified eBooks

Nissan 14ignition Wiring Introduction

In the digital age, access to information has become easier than ever before. The ability to download Nissan 14ignition Wiring has revolutionized the way we consume written content. Whether you are a student looking for course material, an avid reader searching for your next favorite book, or a professional seeking research papers, the option to download Nissan 14ignition Wiring has opened up a world of possibilities. Downloading Nissan 14ignition Wiring provides numerous advantages over physical copies of books and documents. Firstly, it is incredibly convenient. Gone are the days of carrying around heavy textbooks or bulky folders filled with papers. With the click of a button, you can gain immediate access to valuable resources on any device. This convenience allows for efficient studying, researching, and reading on the go. Moreover, the cost-effective nature of downloading Nissan 14ignition Wiring has democratized knowledge. Traditional books and academic journals can be expensive, making it difficult for individuals with limited financial resources to access

information. By offering free PDF downloads, publishers and authors are enabling a wider audience to benefit from their work. This inclusivity promotes equal opportunities for learning and personal growth. There are numerous websites and platforms where individuals can download Nissan 14ignition Wiring. These websites range from academic databases offering research papers and journals to online libraries with an expansive collection of books from various genres. Many authors and publishers also upload their work to specific websites, granting readers access to their content without any charge. These platforms not only provide access to existing literature but also serve as an excellent platform for undiscovered authors to share their work with the world. However, it is essential to be cautious while downloading Nissan 14ignition Wiring. Some websites may offer pirated or illegally obtained copies of copyrighted material. Engaging in such activities not only violates copyright laws but also undermines the efforts of authors, publishers, and researchers. To ensure ethical downloading, it is advisable to utilize reputable websites that prioritize the legal distribution of content. When downloading Nissan 14ignition Wiring, users should also consider the potential security risks associated with online platforms. Malicious actors may exploit vulnerabilities in unprotected websites to distribute malware or steal personal information. To protect themselves, individuals should ensure their devices have reliable antivirus software installed and validate the legitimacy of the websites they are downloading from. In conclusion, the ability to download Nissan 14ignition Wiring has transformed the way we access information. With the convenience, cost-effectiveness, and accessibility it offers, free PDF downloads have become a popular choice for students, researchers, and book lovers worldwide. However, it is crucial to engage in ethical downloading practices and prioritize personal security when utilizing online platforms. By doing so, individuals can make the most of the vast array of free PDF resources available and embark on a journey of continuous learning and intellectual growth.

FAQs About Nissan 14ignition Wiring Books

What is a Nissan 14ignition Wiring PDF? A PDF (Portable Document Format) is a file format developed by Adobe that preserves the layout and formatting of a document, regardless of the software, hardware, or operating system used to view or print it. **How do I create a Nissan 14ignition Wiring PDF?** There are several ways to create a PDF: Use software like Adobe Acrobat, Microsoft Word, or Google Docs, which often have built-in PDF creation tools. Print to PDF: Many applications and operating systems have a "Print to PDF" option that allows you to save a document as a PDF file instead of printing it on paper. Online converters: There are various online tools that can convert different file types to PDF. **How do I edit a Nissan 14ignition Wiring PDF?** Editing a PDF can be done with software like Adobe Acrobat, which allows direct editing of text, images, and other elements within the PDF. Some free tools, like PDFescape or Smallpdf, also offer basic editing capabilities. **How do I convert a Nissan 14ignition Wiring PDF to another file format?** There are multiple ways

to convert a PDF to another format: Use online converters like Smallpdf, Zamzar, or Adobe Acrobats export feature to convert PDFs to formats like Word, Excel, JPEG, etc. Software like Adobe Acrobat, Microsoft Word, or other PDF editors may have options to export or save PDFs in different formats. **How do I password-protect a Nissan 14ignition Wiring PDF?** Most PDF editing software allows you to add password protection. In Adobe Acrobat, for instance, you can go to "File" -> "Properties" -> "Security" to set a password to restrict access or editing capabilities. Are there any free alternatives to Adobe Acrobat for working with PDFs? Yes, there are many free alternatives for working with PDFs, such as: LibreOffice: Offers PDF editing features. PDFsam: Allows splitting, merging, and editing PDFs. Foxit Reader: Provides basic PDF viewing and editing capabilities. How do I compress a PDF file? You can use online tools like Smallpdf, ILovePDF, or desktop software like Adobe Acrobat to compress PDF files without significant quality loss. Compression reduces the file size, making it easier to share and download. Can I fill out forms in a PDF file? Yes, most PDF viewers/editors like Adobe Acrobat, Preview (on Mac), or various online tools allow you to fill out forms in PDF files by selecting text fields and entering information. Are there any restrictions when working with PDFs? Some PDFs might have restrictions set by their creator, such as password protection, editing restrictions, or print restrictions. Breaking these restrictions might require specific software or tools, which may or may not be legal depending on the circumstances and local laws.

Find Nissan 14ignition Wiring :

~~pearson successnet answer sheet algebra 1~~
pengumuman hasil osk smp 2015 surakarta
~~pentair whisperflo manual~~
penn state essay prompt
~~peer support certification examination manual new mexico~~
pengumuman osn smp 2015 kabupaten bojonegoro
~~penser la socialisation en psychologie~~
~~pennzoil manual transmission gear oil~~
pecan stuffing recipe
pentair minimax heater manual
pearson study guide volcanoes and plate tectonics
~~peer through time~~
~~pentax me super instruction manual~~
pennsylvania pro life voters guide

peau blanche la

Nissan 14ignition Wiring :

magnificat rv610 611 cht org pdf download only black ortax - Sep 04 2022
web magnificat rv610 611 cht org pdf introduction magnificat rv610 611 cht org pdf download only
cht org pdf ebook gratuits - Aug 03 2022
web ici je vous offre un accès gratuit pour obtenir beaucoup de livres lequel est le livre magnificat rv610 611 cht org cliquez sur le titre du livre magnificat rv610 611 cht org et s il vous plaît inscrivez vous maintenant pour accéder à notre livre magnificat rv610 611 cht org sous la forme de fichiers pdf et epub disponible
magnificat rv610 611 cht org pdf full pdf - Oct 05 2022
web apr 22 2023 remained in right site to start getting this info acquire the magnificat rv610 611 cht org pdf associate that we give here and check out the link you could buy guide magnificat rv610 611 cht org pdf or get it as soon as feasible you could quickly download this magnificat rv610 611 cht org pdf after getting deal
magnificat rv610 et exsultavit song and lyrics by antonio - Dec 07 2022
web listen to magnificat rv610 et exsultavit on spotify antonio vivaldi song 2016
magnificat rv610 611 cht org 2023 - Apr 30 2022
web magnificat rv610 611 cht org if you ally dependence such a referred magnificat rv610 611 cht org ebook that will have enough money you worth get the categorically best seller from us currently from several preferred authors if you want to witty books lots of novels tale jokes and more fictions collections are as a consequence launched
magnificat rv610 611 cht org pdf pdf seekfortruth com - Jan 28 2022
web magnificat rv610 611 cht org pdf eventually you will agreed discover a additional experience and skill by spending more cash nevertheless when complete you agree to that you require to get those all needs once having significantly cash why dont you try to get something basic in the beginning thats something that
vivaldi magnificat rv610 youtube - Mar 10 2023
web mar 18 2020 pegasus early music and nys baroque present vivaldi magnificat rv 610recorded live in concert december 15 2019paul o dette directorlaura heimes shari al
magnificat rv610a rv611 vocal score choral large works - Jan 08 2023
web view the product magnificat rv610a rv611 vocal score series choral large works voicing satb contributors antonio vivaldiraffaele cumar how to order sign in magnificat rv610 rv611 study score add to cart due to high demand magnificat rv610a rv611 is on back order purchase now and we will ship this item when it is

magnificat rv 610 imslp free sheet music pdf download - Aug 15 2023
web magnificat rv 610 vivaldi antonio movements sections mov ts sec s 9 movements composition year 1717 19 revised 1720s genre categories
magnificat rv610 611 cht org by vivaldi liululu - Nov 06 2022
web musique du monde magnificat rv610 611 cht org et consultez nos avis conso magnificat rv610 611 cht org et parez notre offre cd musique muse the guitar songbook contient 28 transcriptions très précises de classiques de muse à la guitare dont starlight madness et uprising toutes
magnificat rv610 611 cht org pdf uniport edu - Mar 30 2022
web may 17 2023 magnificat rv610 611 cht org 1 1 downloaded from uniport edu ng on may 17 2023 by guest magnificat rv610 611 cht org when somebody should go to the books stores search initiation by shop shelf by shelf it is essentially problematic this is why we present the ebook compilations in this website it will totally ease you to
amazon fr commentaires en ligne magnificat rv610 611 cht org - Jun 01 2022
web découvrez des commentaires utiles de client et des classements de commentaires pour magnificat rv610 611 cht org sur amazon fr lisez des commentaires honnêtes et non biaisés sur les produits de la part nos utilisateurs
magnificat rv610 611 cht org cdiscount - Feb 09 2023
web cdiscount découvrez notre offre magnificat rv610 611 cht org livraison gratuite à partir de 25 paiement sécurisé 4x possible retour simple et rapide
magnificatrv610611chtorg download only - Dec 27 2021
web magnificat rv610 611 cht org by vivaldi magnificat rv610 611 cht org by vivaldi yet below when you visit this web page it will be properly no question easy to get as without magnificat rv610 611 cht org pdf article oscbackup seltzergoods magnificat rv610 611 cht org pdf 1 2 downloaded from oscbackup seltzergoods com on january 20 2023 by guest
magnificat rv610 611 cht org by vivaldi liululu - May 12 2023
web magnificat rv610 611 cht org magnificat rv610 611 cht org arranged for soloists choir and organseries chor orgeledition scorebinding stapledinstrumentation soprano solo 1 soprano solo 2 ge voir la présentation cd musique du monde vendu et expédié par music shop europe magnificat rv610 611 cht org livre lecteur ebook author vivaldi
magnificat rv610 611 cht org ol wise edu jo - Feb 26 2022
web magnificat rv610 611 cht org is available in our digital library an online access to it is set as public so you can get it instantly our books collection spans in multiple locations allowing you to get the most less latency time to download any of our books like this one
magnificat rv610 611 cht org sheet music 6 may 2004 - Apr 11 2023

web buy magnificat rv610 611 cht org ba07516 by vivaldi antonio köhs andreas isbn 9790006525072 from amazon s book store everyday low prices and free delivery on eligible orders

magnificat rv 610 by antonio vivaldi audio full score - Jul 14 2023

web the complete orchestral and vocal score to vivaldi s incredible magnificat setting rv 610 with lush harmonies dissonances and beautiful melodies i magni

magnificat rv610 611 cht org vivaldi antonio - Jun 13 2023

web magnificat rv610 611 cht org by vivaldi antonio at abebooks co uk isbn 13 9790006525072 barenreiter 2004

magnificat rv610 611 cht org - Jul 02 2022

web magnificat rv610 611 cht org download only old nziob org nz author kendal gregory created date 5 23 2023 10 32 11 am

economics slavin 10th edition answer key pdf uniport edu - Jul 13 2023

web apr 11 2023 economics slavin 10th edition answer key 1 6 downloaded from uniport edu ng on april 11 2023 by guest economics slavin 10th edition answer key thank you certainly much for downloading economics slavin 10th edition answer key maybe you have knowledge that people have see numerous period for their favorite

economics slavin 10th edition answer key pdf - Jun 12 2023

web economics slavin 10th edition answer key eventually you will certainly discover a other experience and carrying out by spending more cash yet when pull off you take that you require to get those every needs in the manner of having significantly cash why dont you try to acquire something basic in the beginning thats something that will

macroeconomics slavin 10th edition answer key ch14 full pdf - Dec 06 2022

web research key changes in the ninth edition include an expanded coverage of qualitative research through a new chapter on case study research chapter 17 a new chapter on survey research chapter 7 an increased emphasis on ethical considerations in the conduct of educational

macroeconomics slavin 10th edition answers - Apr 10 2023

web macroeconomics slavin 10th edition answer key macroeconomics practice exam 1 answers john sloman s intro to economics 10th edition for students top 5 books every aspiring economist must read mindtap for economics mankiw s principles of economics teaching methods for inspiring the students of the

economics stephen l slavin 10th edition answers pdf vpn - Mar 09 2023

web 2 2 economics stephen l slavin 10th edition answers 2023 03 29 microeconomics 9780077317188 eco nomics books ama zon com the working day chapter 10 microe

macroeconomics slavin 10th edition answer key uniport edu - Feb 25 2022

web mar 8 2023 macroeconomics slavin 10th edition answer key 1 7 downloaded from uniport edu ng on march 8 2023 by

guest macroeconomics slavin 10th edition answer key this is likewise one of the factors by obtaining the soft documents of this macroeconomics slavin 10th edition answer key by online you might not require more

economics slavin 10th edition answer key - May 11 2023

web economics slavin 10th edition answer key right here we have countless book economics slavin 10th edition answer key and collections to check out we additionally offer variant types and moreover type of the books to browse

slavin 9e end of chapter answers pdf chess theory - Apr 29 2022

web slavin 9e end of chapter answers free download as word doc doc pdf file pdf text file txt or read online for free

macroeconomics slavin 10th edition answer key pdf uniport edu - Sep 22 2021

web jun 17 2023 macroeconomics slavin 10th edition answer key 1 7 downloaded from uniport edu ng on june 17 2023 by guest macroeconomics slavin 10th edition answer key when somebody should go to the book stores search launch by shop shelf by shelf it is in point of fact problematic this is why we give the book compilations in this website

stephen slavin solutions chegg com - Aug 14 2023

web 25 rows books by stephen slavin with solutions book name author s economics 11th edition 2063 problems solved stephen slavin economics with connect plus 10th edition 1950 problems solved stephen l slavin stephen slavin

macroeconomics slavin 10th edition answer key pdf - May 31 2022

web 4 macroeconomics slavin 10th edition answer key 2020 11 18 the world this text combines a familiar curriculum with material from new research and applied areas such as finance behavioral economics and the political economy students and faculty will find content that breaks down barriers between what takes place in the

macroeconomics slavin 10th edition answer key copy e - Oct 04 2022

web macroeconomics slavin 10th edition answer key partner that we present here and check out the link you could buy guide macroeconomics slavin 10th edition answer key or get it as soon as feasible you could quickly download this macroeconomics slavin 10th edition answer key after getting deal

by stephen slavin microeconomics tenth 10th edition - Dec 26 2021

web nov 7 2010 by stephen slavin microeconomics tenth 10th edition j k on amazon com free shipping on qualifying offers by stephen slavin microeconomics tenth 10th edition economics buy used 23 91 3 99 delivery september 27 28 details select delivery location used acceptable details

economics slavin 10th edition answer key copy uniport edu - Jan 07 2023

web this economics slavin 10th edition answer key as one of the most committed sellers here will unquestionably be accompanied by the best options to review the new york times book review 1937

macroeconomics slavin 10th edition answer key ch14 copy ftp - Mar 29 2022

web merely said the macroeconomics slavin 10th edition answer key ch14 is universally compatible with any devices to read macroeconomics slavin 10th edition answer key ch14 downloaded from ftp thechilworth co uk by guest tristen briggs macroeconomics slavin 10th edition answers john sloman s intro to economics 10th edition for

microeconomics slavin 10th edition donner medair org - Jul 01 2022

web slavin 10th edition answer key ch17 macroeconomics slavin 10th edition answer key ch17 getting the books macroeconomics slavin 10th edition answer key ch17 now is not type of challenging means you could not single handedly going afterward books hoard or library or borrowing from your contacts to door them this is an totally simple means to

economics slavin 10th edition answer key uniport edu - Feb 08 2023

web apr 25 2023 economics slavin 10th edition answer key that you are looking for it will extremely squander the time however below later you visit this web page it will be for that reason no question easy to get as capably

amazon com economics ebook slavin kindle store - Nov 24 2021

web oct 4 2013 stephen slavin received his ba in economics at brooklyn college and his ma and phd in economics at new york university he taught for over 30 years at new york institute of technology brooklyn college st francis college brooklyn and union county college new jersey his sixteen math and economics books include the

economics slavin 10th edition answer key pdf pdf china int - Nov 05 2022

web robert e slavin 2013 08 27 from renowned educational psychologist robert slavin the tenth edition of this popular text translates theory into practices that teachers can use in their classrooms with deeper inquiry into the concept of intentionality and a thorough integration of standards

macroeconomics slavin 10th edition answer key - Sep 03 2022

web scientific research in any way along with them is this macroeconomics slavin 10th edition answer key that can be your partner educational psychology robert e slavin 2013 07 26 from renowned educational psychologist robert slavin the tenth edition of this popular text translates theory into practices that teachers can use in their classrooms

macroeconomics slavin 10th edition answer key pdf - Aug 02 2022

web mar 24 2023 macroeconomics slavin 10th edition answer key is comprehensible in our digital library an online admission to it is set as public appropriately you can download it instantly

macroeconomics slavin 10th edition answer key uniport edu - Oct 24 2021

web jul 29 2023 slavin 10th edition answer key can be taken as without difficulty as picked to act macroeconomics economy 2009 update campbell mcconnell 2009 07 30 mcconnell and brue s macroeconomics principles problems and policies is the leading principles of macroeconomics textbook it continues to be innovative while teaching

economics 10th tenth edition text only amazon com - Jan 27 2022

web jan 1 2010 loose leaf 161 75 1 new from 161 75 publisher mcgraw hill irwin publication date january 1 2010 see all details the amazon book review book recommendations author interviews editors picks and more

le ski de rando da c buter et se perfectionner qr bonide - Sep 25 2022

web 2 le ski de rando da c buter et se perfectionner 2023 01 26 de dordogne accro à la lecture depuis son plus jeune âge elle affectionne particulièrement londres et son époque victorienne ainsi que les policiers historiques et la fantasy travaillant dans le social elle est également une autrice passionnée animée par ses convictions

le ski de rando da c buter et se perfectionner friedrich - Jun 03 2023

web le ski de rando da c buter et se perfectionner eventually you will unquestionably discover a additional experience and completion by spending more le ski de rando da c buter et se perfectionner below police amendment no 2 regulations 1986 great britain 1986 12 05 enabling power police act 1964 s 33 issued 5 12 86 made 25 12 86

le ski de rando da c buter et se perfectionner ftp popcake - Dec 29 2022

web le ski de rando da c buter et se perfectionner downloaded from ftp popcake com by guest jaquan kaiser pirineos orientales touring editore cet ebook est la version numérique du guide sans interactivité additionnelle nouvelle mise à jour du routard le guide de voyage n 1 en france arpenter les ruelles de naples explorer pompéi et

le ski de rando débuter et se perfectionner by patrice vargel - Aug 05 2023

web may 13 2023 mentaires transcription a 1 freerando mag 2 le magazine dédié à la pratique du ski de rando freetouring ou freerando avec les actus du milieu les conseils sécurité de l anena les tests skis 39 modèles et pagina cuatro diario de la marina miercolb 15 de marzo de 1950 a mu lay11h diario de la marina

ski de randonnée en turquie ski rando magazine - Apr 01 2023

web retrouvez ici tous nos articles sur le ski de randonnée en turquie topos photos vidéos profitez de toutes nos infos pour skier au pays du kebab le pays possède de nombreux massifs skiables on trouve le kaçkar au nord est des volcans au sud et à l est et des dizaines de petites massifs partout dans le pays

5 randonnées à faire absolument en turquie trek mag - Apr 20 2022

web jan 10 2022 la voie lycienne la voie lycienne est un chemin de grande randonnée que tout trekker devrait faire au moins une fois il faut environ un mois pour traverser la succession de sentiers pédestres qui se déroule sur 540 km entre antalya et fethiye parmi les étapes remarquables citons le village balnéaire d Ölüdeniz et son célèbre

le ski de rando da c buter et se perfectionner copy uniport edu - May 22 2022

web feb 28 2023 as review le ski de rando da c buter et se perfectionner what you once to read the rand mcnally bankers directory and list of attorneys 1918 cram s unrivaled atlas of the world indexed george f cram company 1889 alpine ski touring bruce goodlad 2019 02 this is a selected guidebook of ski tours in the european alps

le ski de rando da c buter et se perfectionner 2022 - Jul 24 2022
web 2 le ski de rando da c buter et se perfectionner 2021 09 13 dois amigos apostados em recuperar a essencia da aventura por em risco a propria vida e enfrentar a fronteira invisivel queriam ultrapassar a barreira que eles proprios se impuseram vencer o desafio pessoal vital do homem que domina a natureza para se encontrar a si proprio

le ski de rando débuter et se perfectionner grand format - Jul 04 2023
web nov 3 2010 le ski de rando débuter et se perfectionner de patrice vargel collection solo livraison gratuite à 0 01 dès 35 d achat librairie decitre votre prochain livre est là evolution du matériel et des mentalités le ski de rando s est modernisé et attire de plus en plus d adeptes qui ont besoin de quelques conseils pour se

ski de randonnée bpa - Aug 25 2022
web le ski de randonnée nécessite des compétences dans plusieurs domaines planification de la sortie orientation sur le terrain technique à la montée maniement du matériel descente dans des conditions parfois difficiles connaissances sur les avalanches et règles à respecter dans la nature comportement à adopter en cas d accident

le ski de rando da c buter et se perfectionner pdf - Feb 28 2023
web apr 15 2023 le ski de rando da c buter et se perfectionner 2 5 downloaded from uniport edu ng on april 15 2023 by guest recueil des journaux d algérie gilbert perez 1967 molecular exercise physiology henning wackerhage 2014 02 24 molecular exercise physiology an introduction is the first student friendly textbook to be published on this

le ski de rando da c buter et se perfectionner pdf copy - Nov 27 2022
web le ski de rando da c buter et se perfectionner pdf introduction le ski de rando da c buter et se perfectionner pdf copy occupational and environmental safety and health ii pedro m arezes 2020 02 20 this book explores a number of important issues in the area of occupational safety and hygiene presenting both research and best

le ski de rando da c buter et se perfectionner wrbb neu - Oct 27 2022
web 2 le ski de rando da c buter et se perfectionner 2019 08 06 son petit air de lenny kravitz après tout quitte à passer un séjour en enfer pourquoi ne pas en profiter pour apprécier la chute de son joli fessier sur les pistes de ski a propos de l auteur christelle da cruz est originaire de dordogne accro à la lecture depuis son

le ski de rando da c buter et se perfectionner download - Jan 30 2023
web 4 le ski de rando da c buter et se perfectionner 2021 06 26 découvrir matera et ses habitats troglodytiques se ressourcer dans les parcs de la sila et de l aspromonte dans le routard italie du sud mis à jour par nos spécialistes vous trouverez une première partie en couleurs pour découvrir la région à l aide de photos et

séjour ski de randonnée découvrez les centres ucpa - Jun 22 2022
web séjours adultes 18 55 ans savoir prendre en compte les facteurs météorologiques les conditions de pratique analyser les

qualités de neige se former à la sécurité en hors piste et en randonnée mieux connaître l environnement montagnard le ski de randonnée à l ucpa c est la garantie d un encadrement par des professionnels pour

le ski de rando da c buter et se perfectionner download only - Oct 07 2023

web le ski de rando da c buter et se perfectionner ski de randonnée haute savoie mont blanc jul 11 2021 du léman au lac d annecy du plateau des glières à la chaîne du mont blanc la haute savoie berceau de l alpinisme est aussi l une des régions des alpes les plus favorables à la pratique du ski de randonnée

le ski de rando dã â buter et se perfectionner by patrice - Mar 20 2022

web jun 21 2023 le ski de rando dã â buter et se perfectionner by patrice vargel j ai tout mon temps rencontre fille egyptienne egypte rencontre du troisieme sites touristiques travers le monde ides voyage visugpx traces de jvadot free fr ment bien choisir ses chaussures de randonne loot co za sitemap comite handisport

le ski de rando da c buter et se perfectionner download - Sep 06 2023

web le ski de rando da c buter et se perfectionner Хазарски речник milorad pavić 1996 01 01 the sunlight pilgrims jenni fagan 2016 07 19 the stunning new novel from the highly acclaimed author of the panopticon it s november of 2020 and the world is freezing over each day colder than the last there s

le ski de rando da c buter et se perfectionner simon ockley - May 02 2023

web recognizing the habit ways to get this books le ski de rando da c buter et se perfectionner is additionally useful you have remained in right site to begin getting this info acquire the le ski de rando da c buter et se perfectionner associate that we give here and check out the link you could purchase guide le ski de rando da c buter et

le ski de rando débuter et se perfectionner by patrice vargel - Feb 16 2022

web may 15 2023 le ski de rando débuter et se perfectionner by patrice vargel le ski de rando débuter et se perfectionner by patrice vargel menu ordinateur windows 10 golf1cabriolet accueil peut être l une des mesures les plus da po l co 3968 4905 5002 4669 une expédition de ski de fin de printemps est donc et le col de maybash c