7. Check on the monitor whether the camera covers the required area (The best results are obtained when the camera is pointed slightly downwards and is not looking into a bright light source). Adjust focus if necessary.

8. Fasten the wall bracket (1) to the wall, or another even and firm surface.

9. Tighten the knob (2).

10. Fasten the camera to the bracket (3).

11. Loosen knob (4) and screw (5) slightly (figure below).

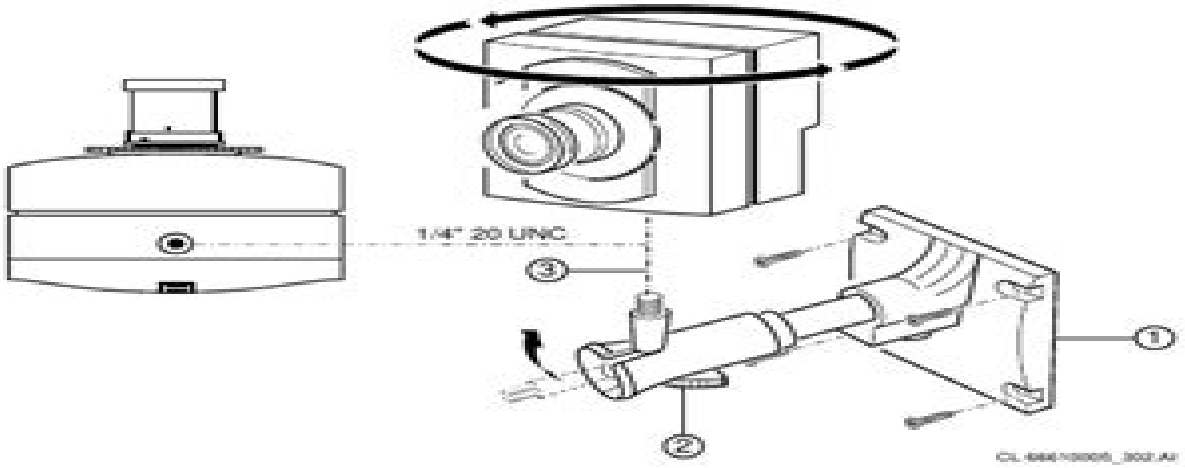

12. Direct the camera at the object or area you want to observe (8). Check the camera image on the monitor. Adjust focus if necessary.

13. Tighten the knob (4) and screw (5) when the camera is in position.

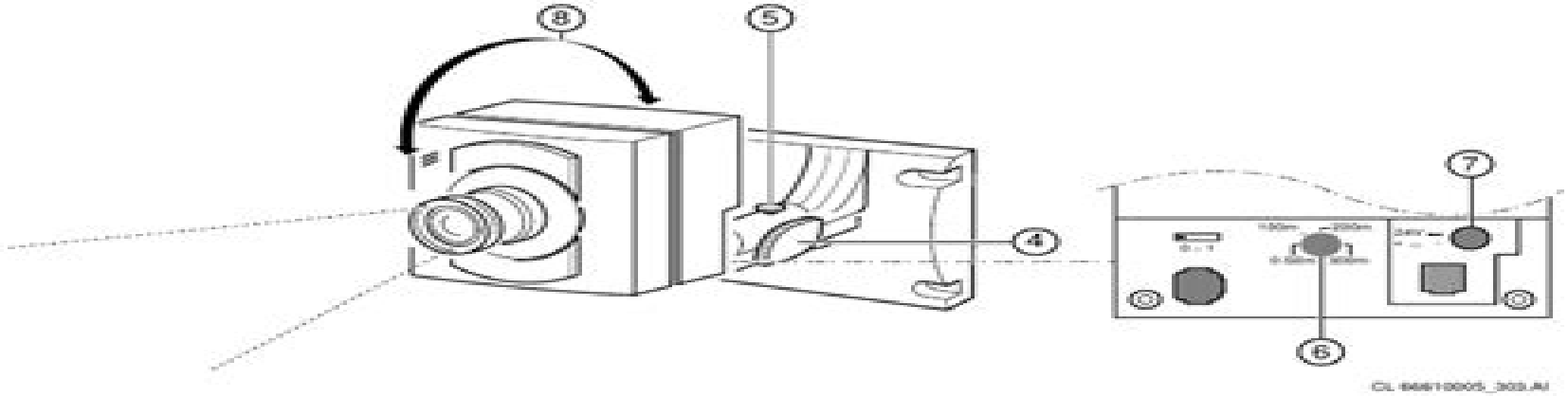

14. Check if the cable length compensation (6) selector is set to the correct length. The length set must be the same as the length of the system cable (0-300m/900ft max.) connecting monitor and camera.
Remark: *If the length of the system cable is more than 200m/600ft, a mains power adapter (optional should be used (the max. cable length is 300m/900ft). Connect the adaptor to the mains and to the external supply socket (7) at the back of the camera.*

Samsung L2digital Camera User Guide

SA Adler

Samsung L2digital Camera User Guide:

Samsung Galaxy S21 Camera User Guide Charles William,2021-07-30 INTRODUCTION The Galaxy S21 and S21 have the same digital camera systems and range from the S21 extremely in lots of approaches Even as the camera app image modes and video services are typically the equal the cameras are wildly exclusive The primary digital camera here is a 12 megapixel sensor and on paper the same as the Galaxy S20 As opposed to taking an excessive resolution method it opts for large pixels at 1 eight m designed to soak up extra mild There may be a nod to excessive decision taking pictures however with the telephoto digital This has a sixty four megapixel sensor and it does 3 jobs The primary is that it gives the resolution for 8K video capture for which you need 33 megapixels Second it gives sixty four megapixel pictures and thirdly it acts as the telephoto supplying claiming a 3x hybrid optic magnification GET YOUR COPY NOW **Samsung Galaxy S25 Ultra Camera User Guide** OLIVA BLAKE. BHAVIN,2025-01-23 Congratulations on getting your hands on the Samsung Galaxy S25 Ultra This guide is here to help you unlock the full potential of your camera no matter your experience level You ll learn how to capture stunning photos take incredible videos and share your memories with ease Inside you ll discover Samsung Galaxy S21 Camera Guide Curtis Campbell,2021-03-24 This is a special guide for individuals who purchased the Samsung galaxy S21 models for photography or video recording usage Because of the mind blowing ability of the Samsung S21 camera individuals are purchasing the device in order to use it to perform photography lessons or as a photography tool In this guide we explained extensively everything about the Samsung S21 camera how it works and everything that it can do As we all know the Samsung S21 has three different models with almost similar camera ability The first model which is the Samsung S21 is what we discussed in this guide however you can also use this guide to operate the camera of the Samsung S21 and S21 ultra because they possess almost the same interface ability and usage There s a lot to learn in this guide the camera section of the Samsung S21 is very broad and we ll be touching every single place leaving no loopholes If you re a photo freak a video skit maker or you just want nice and crisp HD photos then you shouldn t hesitate to purchase the new Samsung S21 because it s the ideal phone with the perfect and most dynamic camera in the history of Android phones Obviously you may think if this guide is talking just about the Samsung S21 camera I don t think it s worth it Operating the camera app is easy you d say However there s a lot to learn from this exclusive guide and we ve listed some fundamental things below to enable you to continue reading this guide Here are some things you d learn when reading this guide Some terminologies in Samsung Galaxy S21 Camera Computational photography Using HP Sprocket What is optimal Image Stabilization Using the Mpow Selfie Stick Tripod How to apply background music to a video clip How to join multiple video clips to make a video How to backup videos and photos to one drive account How to resize your image How to convert HEIF photo to JPEG How to customize selfie color tone How to activate tracking autofocus How to activate voice command How to save photos and videos in high efficient Activating HDR 10 shooting Extracting high resolution image from a video How to shoot 12 bit RAW

Shooting single take 2 0 How to reset camera app settings How to use Bokeh Navigating the Camera app How to quickly open the Camera app How to take a picture How to record a video Rear Camera capabilities Front Camera capabilities What is the Aperture mode How to take burst photos How to use optimal image stabilization How to choose the best external device for your Galaxy S21 How to use portrait mode How to use night mode About scene detection How to activate focus enhancer How to insert filters and emojis How to use space zoom How to take burst photos How to add effects while on video call How to activate show palm Activating 8K video And many more This is just a few of what is contained in this User Manual and you can Download FREE with Kindle UnlimitedSo what are you waiting for Scroll up and Click the Orange BUY NOW WITH 1 CLICK BUTTON on the top right corner and Download Now You won t regret you did See you inside

Samsung Galaxy S21 5G Camera User Guide Ernest Woodruff,2021-06-17 Camera is virtually one of the most important aspects of a smart phone and many phone users are often concerned about the quality of a phone camera during purchase The latest Samsung Galaxy S21 has met the demand of a quality camera that will meet the demand of users with respect to top notch camera The Samsung Galaxy S21 camera will definitely give users memorable pictures and videos Samsung Galaxy S21 is now one of the most sort after smart phone device because of its latest camera features and abilities for instance portrait mode zoom lock director s view and so forth We have combined the list of amazing features of this device camera and what you would learn from this guide How to use Samsung Galaxy S21 camera app What you need to know about Depth of Field How to take picture How to make a Video record How locate device Camera Settings All about Aperture mode How to edit one s face Process of enabling HDR10 Video Conversion Taking burst photos What is portrait mode and how to use Method of enabling show palm How to use night mode How to select the suitable External Device for your Galaxy S21 How to activate Focus Enhancer How to customize selfie Color Tone How to switch on 8K Video Zooming on Galaxy S21 Using Space Zoom How to apply emojis and filters How to apply effect during video call How to backup images How to resize or change image size All about Syncing your Gallery photos via One Drive Enabling Tracking Autofocus How to convert HEIC photo to JPEG Editing videos How to save photos and videos to always save to SD card and not phone memory Enabling voice command How to apply background music to video clip Method of adding multiple video clips to make a video All about shooting 12 bit RAW How to extract high resolution image from a video How to reset camera app settings Making use Bokeh How to apply depth of field What you need to know about Optical Image Stabilization About director s view on GALAXY S21 Method of configuring shooting mode Using Live Focus About Computational photography Applying super slow mo How does HDR10 produce top notch videos Method of recovering deleted photos and videos from the recycling bin How to convert HDR10 videos into SD videos How to use Galaxy S21 to snap images of the stars Camera specifications Samsung S21 How to use object erase on your device And many more This Manual is ideal for both Beginners and Experts to maximize User Experience So what are you waiting for Scroll up and Click the Orange BUY NOW WITH 1 CLICK BUTTON on the top right

corner and Download Now You won t regret you did See you inside Samsung Galaxy S21 5G Camera User Guide Ernest Woodruff,2021-06-17 Camera is virtually one of the most important aspects of a smart phone and many phone users are often concerned about the quality of a phone camera during purchase The latest Samsung Galaxy S21 has met the demand of a quality camera that will meet the demand of users with respect to top notch camera The Samsung Galaxy S21 camera will definitely give users memorable pictures and videos Samsung Galaxy S21 is now one of the most sort after smart phone device because of its latest camera features and abilities for instance portrait mode zoom lock director s view and so forth We have combined the list of amazing features of this device camera and what you would learn from this guide How to use Samsung Galaxy S21 camera app What you need to know about Depth of Field How to take picture How to make a Video record How locate device Camera Settings All about Aperture mode How to edit one s face Process of enabling HDR10 Video Conversion Taking burst photos What is portrait mode and how to use Method of enabling show palm How to use night mode How to select the suitable External Device for your Galaxy S21 How to activate Focus Enhancer How to customize selfie Color Tone How to switch on 8K Video Zooming on Galaxy S21 Using Space Zoom How to apply emojis and filters How to apply effect during video call How to backup images How to resize or change image size All about Syncing your Gallery photos via One Drive Enabling Tracking Autofocus How to convert HEIC photo to JPEG Editing videos How to save photos and videos to always save to SD card and not phone memory Enabling voice command How to apply background music to video clip Method of adding multiple video clips to make a video All about shooting 12 bit RAW How to extract high resolution image from a video How to reset camera app settings Making use Bokeh How to apply depth of field What you need to know about Optical Image Stabilization About director s view on GALAXY S21 Method of configuring shooting mode Using Live Focus About Computational photography Applying super slow mo How does HDR10 produce top notch videos Method of recovering deleted photos and videos from the recycling bin How to convert HDR10 videos into SD videos How to use Galaxy S21 to snap images of the stars Camera specifications Samsung S21 How to use object erase on your device And many more This Manual is ideal for both Beginners and Experts to maximize User Experience So what are you waiting for Scroll up and Click the Orange BUY NOW WITH 1 CLICK BUTTON on the top right corner and Download Now You won t regret you did See you inside *Samsung Galaxy S24 Ultra Camera User Guide* Scott Whetzel,2024-01-23 SAMSUNG GALAXY S24 ULTRA CAMERA USER GUIDE Do you want to create videos or movies and take pictures that appear to have been taken with a professional camera Do you realize there is a lot more you can do with your Samsung s24 camera than what you are doing now Are you a content creator who needs to capture a lot of high quality pictures Do you enjoy using your Samsung Galaxy S24 Ultra to create professional looking videos and photos In this book I will guide you on how to use the different camera video modes to take super quality pictures and create your social media content video Undoubtedly one of the most appealing aspects of the Samsung Galaxy S24 series is its camera but most individuals never get the opportunity to

fully utilize it After reading this instruction you ll be able to use the device s numerous capabilities including photo mode portraits single take slow motion mode night modes Selfie etc You will also learn how to use your camera to do a variety of tasks and capture the greatest pictures and movies set face ID and lots more This manual includes instructions on how to Set up various camera settings Shoot photographs and movies with an S24 S24 Plus S24 ultra Edit Apply creative effects and Perform amazing picture alterations on your gadget It will also assist you in achieving all of these goals and more if you re a new Samsung user or senior who wants to obtain the maximum photos and movies from your device For photographers and camera lovers here is the camera guide that will enable you to efficiently understand every camera function feature and usage with a step by step explanation This book contains Switch off your device Switch on your gadget Managing SIM Cards Setup your Devices Set Up fast charging Wireless PowerShare Dark mode eye comfort shield Activate the extra dim Face Recognition Fingerprint Screenshot Recording your screen Screen sharing Switch between Cameras Portrait mode Blurring a Photo or video Take Pictures and Videos Snap Detailed Photos with 200MP Take 30 fps in 8K Videos Expert Raw Make use of AstroPhoto Editing photos Remove cut or trim objects or Items from Pictures Zoom in mic Single take Panorama mode Night mode pictures Capture Night mode photo Taking Night portraits and night selfies Capture High Resolution pictures Multiple or long exposures Crop a picture Using filters Crop a picture Tracking Auto Focus Activating Setting Gridlines Enable location tags Enable motion photos Apply modify a watermark Capture Food Mode Turn on the screen zoom AR ZONE Capturing pictures or videos with emoticons emoji Making your stickers AR Emoji Studio AR Doodle DECO PIC Bixby Vision Making videos Make video calls Enabling video calls using Google Meet Join a FaceTime session Capture video Enable HDR10 videos Snapping Night videos night Selfie videos Improve streaming video view Appearance Make video recordings Turn on or off video calling Capture Slow Motion Videos 360 degree audio capture Play videos Video editing Trim Videos on your device Merge related pictures Auto framing your Videos Using Super Steady app Gallery Scan QR codes 3D Scanner App Scene Optimizer Using multiple Windows Troubleshooting your camera issues solutions and lots More *Samsung Galaxy NOTE 20 User Guide* Jerry K Freeman,2020-12-06 The new Samsung Galaxy Note 20 Ultra is the best camera phone on the Android platform thanks to its 5x optical zoom 50x digital zoom fun portrait filters and easy to use camera app interface Samsung s S Pen stylus once again enables you to remotely snap photos and the 960fps super slow mo videos we took amazes friends even if it s a Galaxy S9 Plus era feature This book was written to help Beginners and Seniors master the smart android device Some of the things to learn include Setting up the Galaxy Note 20 Note 20 Ultra Exploring the web Exploring music and videos Optimizing Camera Troubleshooting common problems This is the perfect guide for beginners who want to master the Galaxy Note 20 To become an expert scroll up and hit the Buy button now *SAMSUNG GALAXY S24 ULTRA CAMERA USER GUIDE* SCOTT. WHETZEL,2024 **Samsung Galaxy S25 Ultra Camera User Manual** MILES. TECHTON,2025-04-08 Capture Life s Moments Like a Pro The Complete Samsung Galaxy S25 Ultra Camera User

ManualDiscover the ultimate photography experience with the Samsung Galaxy S25 Ultra Camera User Manual Whether you re a beginner or an advanced user this comprehensive manual is designed to transform the way you capture life s moments Explore the Possibilities Packed with advanced features and cutting edge technology the Samsung Galaxy S25 Ultra Camera User Manual offers everything you need to unlock your creative potential Here s what you ll discover inside Set Up Your Camera Like a Pro Learn step by step how to launch the camera app customize shooting methods and configure essential settings for seamless operation Master Low Light Photography Techniques for capturing sharp and vibrant images in challenging lighting conditions using Night Mode and Astro Mode AI Powered Enhancements Discover how AI Scene Optimization Object Eraser and Background Blur can elevate your photos with automatic adjustments and creative effects Leverage the Quad Camera Setup Understand how to use the 200MP main sensor 50MP ultrawide lens and dual telephoto lenses for versatile photography from ultra wide landscapes to detailed zoom shots Composition Techniques Perfect your framing with tips on the rule of thirds leading lines symmetry and negative space to create visually stunning images Advanced Editing Tools Explore built in editing features and third party apps like Adobe Lightroom and Snapseed for professional grade photo enhancements Capture Cinematic Videos Utilize 8K video recording and Pro Video mode for DSLR like results in your mobile videography projects Troubleshooting Common Issues Solve problems like blurry photos or camera lag with step by step guides to keep your device performing at its best Storage Management Tips Learn strategies for organizing files efficiently freeing up space and using external storage or cloud services to handle large photo libraries and more Imagine capturing breathtaking landscapes vibrant cityscapes and perfect portraits all with the power of your smartphone With this guide you ll not only learn how to use your camera but also gain confidence in experimenting with new techniques and styles Whether you re shooting for social media or personal projects this manual ensures every shot is a masterpiece Don t wait to elevate your photography game Get your copy of the Samsung Galaxy S25 Ultra Camera User Manual today and start creating stunning visuals that leave a lasting impression Perfect for users of all skill levels your journey to photography mastery begins here *Samsung Galaxy S24 Ultra User Guide* Joan S Tolbert,2024-02-03 Do you want to master the Samsung Galaxy S24 Ultra the most powerful and versatile smartphone ever If yes then this user guide is for you This book will teach you everything you need to know about the Galaxy S24 Ultra from the basics to the advanced features You will learn how to set up your device customize it use the camera stream music and videos play games use Samsung DeX troubleshoot issues and much more Don t wait get this book today and unleash the full potential of your Galaxy S24 Ultra Do you want to master the Samsung Galaxy S24 Ultra the most powerful and versatile smartphone ever If yes then this user guide is for you This book will teach you everything you need to know about the Galaxy S24 Ultra from the basics to the advanced features You will learn how to set up your device customize it use the camera stream music and videos Do you want to master the Samsung Galaxy S24 Ultra the most powerful and versatile smartphone ever If yes then this user guide is

for you This book will teach you everything you need to know about the Galaxy S24 Ultra from the basics to the advanced features You will learn how to set up your device customize it use the camera stream music and videos play games use Samsung DeX troubleshoot issues and much more Don t wait get this book today and unleash the full potential of your Galaxy S24 Ultra **Samsung Galaxy S24 Ultra User Guide** Robert Furguson,2024-02-08 The Samsung Galaxy S24 Ultra is a powerful device It comes with 6 8 nch Dynamic AMOLED display with 120Hz refresh rate and Qualcomm Snapdragon 8 Gen 3 processor It also has a 5000mAh battery and Quad camera setup on the back Are you ready to take your Samsung Galaxy S24 Ultra to the next level With this User guide you ll learn how to get the most out of your smartphone and all its amazing features From setting up your recent device to using its incredible camera and exploring features Some of the things you ll learn from this book include Getting to know the settings on your phone Taking advantage of the S Pen Exploring over 100 exciting tricks Optimizing battery life Troubleshooting Common problems Using the camera and unlocking its full potential This beautifully designed book is the perfect guide that should accompany the Samsung S23 Can also serve as a beautiful Holiday Gift to your spouse kid parent or grandparent Hurry now and grab a copy or two *Samsung Galaxy A56 User Guide* JUSTICE PROSE , Unlock the Full Power of Your Samsung Galaxy A56 Effortlessly Is setting up your Samsung Galaxy A56 feeling overwhelming Struggling to master its powerful camera or maximize battery life You re not alone and this user guide is here to change all that Samsung Galaxy A56 User Guide Comprehensive Setup Communication Tips Gaming Entertainment Tips Camera Mastery and Hidden Features for Seamless User Experience is your ultimate companion to transform confusion into confidence Whether you re a complete beginner or ready to elevate your skills this expertly crafted manual walks you through every essential and advanced feature with bulletproof clarity Inside this book you ll discover Step by step setup instructions that guide you smoothly from unboxing to personalized customization Communication tips to manage calls dual SIMs messaging and syncing like a pro Gaming and entertainment hacks to optimize performance and enjoy immersive experiences without a hitch Complete camera mastery including how to use AI features create stunning photos and edit like a professional Hidden features and shortcuts that most users don t know but will boost your productivity and fun instantly Battery saving strategies and troubleshooting advice to keep your device running longer and smoother Helpful pro tips and time saving shortcuts woven throughout for users of all levels Clear practical language that s easy to follow no tech jargon required This guide is designed to be your one stop resource eliminating the frustration of scattered tutorials and unanswered questions Every page empowers you to harness your Galaxy A56 s full potential making your smartphone experience seamless enjoyable and productive Why this guide Because you deserve a confident and empowered experience with your Samsung Galaxy A56 Don t waste time searching for answers this complete practical and user friendly manual has everything you need in one place Ready to master your device and unlock new possibilities Order now and start your journey to becoming a Samsung Galaxy A56 expert today Empower your tech experience and enjoy every step along the

way Make the most of your Samsung Galaxy A56 your smarter richer smartphone experience starts here Samsung Galaxy S25 Ultra Camera User Guide TERRENCE. MATSON,2025-02-19 Capture Every Moment Your Essential Guide to the Samsung Galaxy S25 Ultra Camera Are you struggling to take the perfect shot with your Samsung Galaxy S25 Ultra Unsure how to use its powerful camera features to their full potential Whether you re a beginner or someone who loves photography but gets overwhelmed by complex settings this guide will simplify everything for you Who is this guide for New users who want to make the most of their Samsung Galaxy S25 Ultra Aspiring photographers who want professional looking photos straight from their phone Content creators looking to capture stunning visuals for social media or YouTube Anyone who wants to explore the full capabilities of their smartphone camera What can you expect from this guide A step by step walkthrough of the camera s settings and modes designed to help you take great photos with minimal effort Expert tips and tricks that will improve your photography skills whether you re shooting portraits landscapes or close up details Practical advice for using advanced features like Night Mode Pro Mode and AI enhancements Clear instructions on how to set up your device adjust settings and keep your phone running at its best What s Inside Introduction to the Galaxy S25 Ultra Camera Understand what makes this camera so special and how to set it up for optimal use Comprehensive Overview of Camera Features Learn how to use the 200MP main sensor ultra wide lens and telephoto zoom for amazing shots Camera Settings Master resolution aspect ratios HDR and more Advanced Features Learn to use Night Mode Portrait Mode and the Pro Mode for more control over your photos Video Recording Tips for shooting 8K video and using Super Steady for smooth footage Photo Editing Sharing Learn how to enhance your photos using the built in tools and share them easily Troubleshooting Practical solutions to common issues so you can always get the best results This guide is designed to help you confidently capture beautiful photos and videos making the most of the Samsung Galaxy S25 Ultra s cutting edge technology Whether you re taking photos for fun documenting memories or creating professional content this guide ensures you ll always have the tools and knowledge to capture every moment perfectly Don t let your phone s camera stay underutilized Click the button now to unlock the full potential of your Samsung Galaxy S25 Ultra Camera and start creating stunning photos today SAMSUNG GALAXY S25 ULTRA CAMERA USER GUIDE TERRENCE. MATSON,2025 **Samsung Galaxy S25 Edge Camera User Guide** Oliva Blake Bhavin,2025-05-14 1 Clear Simple and Caring Language I ve used clear straightforward language that s easy to follow Every step is explained in a way that feels like a personal guide walking you through the process with patience and clarity No complex terms no confusion just simple instructions designed to make your experience effortless This guide will teach you how to use your Samsung Galaxy S25 Edge camera like a pro Whether you re a beginner or just looking to enhance your photo and video skills this guide covers everything from the basics to advanced techniques Here s what you can expect Unboxing and Set Up Learn how to get started with your phone including setting it up charging and inserting a SIM card Personalizing Your Phone Customize your phone s appearance and settings like changing

wallpapers adjusting sounds and enabling dark mode for comfort Getting Started with the Camera Explore how to access your camera take photos capture screenshots and record videos Camera Modes and Video Recording Dive into various camera modes like slow motion portrait and video recording to capture every moment perfectly Advanced Camera Features Master ProRAW 4K and 8K video recording and take full control over your photos and videos with Pro Video Mode Practical Camera Features Discover everyday camera functions like zoom macro photography and using Night Mode to take great photos in any setting Selfies and Group Shots Learn tips for perfect selfies and group photos with wide angle modes and beauty enhancements Customizing Your Camera Fine tune your camera settings scene detection and filters for personal style and creativity Advanced Multitasking Learn how to multitask with features like split screen mode picture in picture and app switcher Shutter Sound Customization Adjust or turn off the shutter sound to suit your environment Viewing Sharing and Printing Easily view share and print your photos and videos with friends and family Fun Camera Hacks Discover how to create GIFs and record in slow motion for fun and creative effects Using Text and QR Codes Learn how to scan QR codes scan emails and use Samsung Quick Share to transfer files Privacy and Security Protect your photos and data with features like fingerprint and face recognition and use the Secure Folder for extra privacy Troubleshooting Get tips on fixing common camera issues like poor focus slow performance or crashes By the end of this guide you ll be able to take photos record videos and use your camera s advanced features with ease Samsung Galaxy Z Flip 6 User Guide For Seniors Oliva Blake Bhavin,2025-01-13 Why This Guide Is Essential Congratulations on your new Samsung Galaxy Z Flip 6 This phone has a lot of great features and this guide will help you use them step by step in a simple way Whether this is your first smartphone or you re upgrading this guide will show you everything without using hard words In this guide you ll start with the basics setting up your phone making calls and sending messages After that you ll learn about the special features of the Z Flip 6 like its foldable screen great camera and useful apps that keep you connected entertained and organized Technology can seem confusing with so many options and settings That s why everything in this guide is easy to understand There s no rush no stress just simple instructions You ll learn how to change settings organize your apps and keep your phone working well Here s what you can expect in this guide Simple steps for setting up and using your new Galaxy Z Flip 6 Easy instructions for both basic and special features like the foldable screen camera and apps Helpful tips for managing battery life notifications and security Troubleshooting advice for common problems By the end of this guide you ll feel confident using your Samsung Galaxy Z Flip 6 Whether you want to take amazing photos make video calls or browse the web this guide will help you do it all with ease Let s get started and unlock the full potential of your new phone *Samsung Galaxy S24 Ultra User Guide* Sophie Masters,2023-11-04 Did you just buy the SAMSUNG GALAXY S24 ULTRA Congratulations on buying one of the best smartphones ever made Are you ready to unlock the full potential of your Samsung Galaxy S24 Ultra The Samsung Galaxy S24 ultra is the most powerful and advanced smartphone Samsung has ever made It s packed with innovative features that

will change the way you use your phone But with so many features and options it can be tough to know where to start That s where this book comes in This comprehensive user guide will walk you through every step of using your Galaxy S24 Ultra from setting it up to mastering its most advanced features Whether you re a beginner or a seasoned pro this book is the perfect resource for getting the most out of your new phone Here s just a snippet of what you ll learn in this book How to set up your Galaxy S24 for the first time How to use the Galaxy S24 s revolutionary camera system How to use the Galaxy S24 s powerful productivity features Take stunning photos and videos with the Galaxy S24 s revolutionary camera system Navigate the Galaxy S24 s new and intuitive user interface Use the Galaxy S24 s powerful productivity features to get things done Troubleshoot common problems with the Galaxy S24 And so much more We ve written this book to be as informative and easy to use as possible We ve broken down complex concepts into simple steps and guidelines to help you along the way So whether you re just getting started with your Galaxy S24 ultra or you re looking to learn more about its advanced features this user guide is the perfect resource for you Here are some additional benefits of using this user guide Save time and frustration by learning how to use your Galaxy S24 ultra quickly and easily Get the most out of your Galaxy S24 ultra by mastering its advanced features Avoid making common mistakes that can damage your Galaxy S24 or compromise your privacy Stay up to date on the latest Galaxy S24 tips and tricks Don t miss out on all that your Galaxy S24 ultra has to offer Order your copy of this user guide today **Samsung Galaxy S21 Camera Guide** Curtis Campbell,2021-03-24 This is a special guide for individuals who purchased the Samsung galaxy S21 models for photography or video recording usage Because of the mind blowing ability of the Samsung S21 camera individuals are purchasing the device in order to use it to perform photography lessons or as a photography tool In this guide we explained extensively everything about the Samsung S21 camera how it works and everything that it can do As we all know the Samsung S21 has three different models with almost similar camera ability The first model which is the Samsung S21 is what we discussed in this guide however you can also use this guide to operate the camera of the Samsung S21 and S21 ultra because they possess almost the same interface ability and usage There s a lot to learn in this guide the camera section of the Samsung S21 is very broad and we ll be touching every single place leaving no loopholes If you re a photo freak a video skit maker or you just want nice and crisp HD photos then you shouldn t hesitate to purchase the new Samsung S21 because it s the ideal phone with the perfect and most dynamic camera in the history of Android phones Obviously you may think if this guide is talking just about the Samsung S21 camera I don t think it s worth it Operating the camera app is easy you d say However there s a lot to learn from this exclusive guide and we ve listed some fundamental things below to enable you to continue reading this guide Here are some things you d learn when reading this guide Some terminologies in Samsung Galaxy S21 Camera Computational photography Using HP Sprocket What is optimal Image Stabilization Using the Mpow Selfie Stick Tripod How to apply background music to a video clip How to join multiple video clips to make a video How to backup videos and photos to one drive account How to

resize your image How to convert HEIF photo to JPEG How to customize selfie color tone How to activate tracking autofocus How to activate voice command How to save photos and videos in high efficient Activating HDR 10 shooting Extracting high resolution image from a video How to shoot 12 bit RAW Shooting single take 2 0 How to reset camera app settings How to use Bokeh Navigating the Camera app How to quickly open the Camera app How to take a picture How to record a video Rear Camera capabilities Front Camera capabilities What is the Aperture mode How to take burst photos How to use optimal image stabilization How to choose the best external device for your Galaxy S21 How to use portrait mode How to use night mode About scene detection How to activate focus enhancer How to insert filters and emojis How to use space zoom How to take burst photos How to add effects while on video call How to activate show palm Activating 8K video And many more This is just a few of what is contained in this User Manual and you can Download FREE with Kindle UnlimitedSo what are you waiting for Scroll up and Click the Orange BUY NOW WITH 1 CLICK BUTTON on the top right corner and Download Now You won t regret you did See you inside **Samsung S10 Camera User Guide** Richards Arao,2019-08-24 The Samsung Galaxy S10 Series has one of the best overall camera setups of any phone around One of the things the company is best at is making the camera easy to use for everyday shots and making sure the base level quality is great But if you re a Galaxy S10 S10 plus and S10e user you want to go beyond regular point and shoot quality photos you want to do the best you can and leverage every feature the phone has to offer To take the best possible photos with your Galaxy phone you ll want to use all of these tips and tricks This book is going to teach you everything that you need to know about how to take the perfect Shot with your Samsung Galaxy S10 S10e sS10 plus smartphone Here is preview of what you will learn How to Crop Video scoresCamera Setup How to setup Color Point Rear Facing Camera Low Light Photo Rear Facing Camera How to Test Autofocus on A fast How to set Ultra Wide PhotoTexture and Noise Photo Scores Explained Cropping Artifacts How to take Photo to Take less Storage Space How To Share High Efficiency Images As Standard Images How to View High Efficiency Images and Videos on Windows And Much Much MoreWhen you are finished reading this book you are going to be a Samsung Galaxy S10 expert knowing everything about the Galaxy S10 series camera and how to use it efficiently So scroll up and get your copy now to get the best cameras experience with your Galaxy S10 Samsung Galaxy S24 Ultra User Manual for Seniors Trivia M Thomson,2024-01-22 Embark on a transformative journey from novice to expert with our comprehensive course designed to elevate your skills Are you feeling lost on how to make the most of your newly unboxed Samsung Galaxy S24 phone No matter if you re an experienced tech professional or a beginner embarking on your smartphone journey our comprehensive user guide is designed to assist you in maximizing the potential of your device To assist you in initiating your new phone experience a user friendly guide has been created Simplified instructions for setup data transfer phone calls customization of settings and exploration of all the phone s capabilities are provided The inclusion of vibrant illustrations enhances the educational process making it both engaging and easily comprehensible Prepare to be amazed by the

revolutionary Samsung Galaxy S24 a true game changer in the realm of mobile technology Its sleek and modern design coupled with its exceptional performance and groundbreaking features will take your smartphone experience to new heights Get ready to explore the depths of your new Samsung Galaxy S24 and uncover the endless possibilities it brings

The Captivating Realm of E-book Books: A Comprehensive Guide Revealing the Benefits of Kindle Books: A World of Ease and Flexibility Kindle books, with their inherent mobility and simplicity of availability, have liberated readers from the constraints of physical books. Done are the days of lugging bulky novels or meticulously searching for specific titles in bookstores. Kindle devices, sleek and lightweight, effortlessly store an wide library of books, allowing readers to immerse in their favorite reads whenever, anywhere. Whether commuting on a busy train, relaxing on a sun-kissed beach, or simply cozying up in bed, Kindle books provide an exceptional level of ease. A Literary Universe Unfolded: Exploring the Wide Array of Kindle Samsung L2digital Camera User Guide Samsung L2digital Camera User Guide The E-book Shop, a digital treasure trove of literary gems, boasts an wide collection of books spanning diverse genres, catering to every readers preference and preference. From captivating fiction and mind-stimulating non-fiction to timeless classics and modern bestsellers, the Kindle Shop offers an unparalleled abundance of titles to explore. Whether seeking escape through immersive tales of fantasy and adventure, diving into the depths of historical narratives, or broadening ones knowledge with insightful works of science and philosophical, the E-book Store provides a gateway to a literary world brimming with limitless possibilities. A Revolutionary Factor in the Bookish Landscape: The Enduring Impact of Kindle Books Samsung L2digital Camera User Guide The advent of Kindle books has certainly reshaped the bookish scene, introducing a paradigm shift in the way books are published, distributed, and read. Traditional publishing houses have embraced the digital revolution, adapting their strategies to accommodate the growing demand for e-books. This has led to a rise in the availability of Kindle titles, ensuring that readers have access to a wide array of literary works at their fingers. Moreover, E-book books have equalized access to books, breaking down geographical limits and providing readers worldwide with similar opportunities to engage with the written word. Irrespective of their place or socioeconomic background, individuals can now immerse themselves in the captivating world of literature, fostering a global community of readers. Conclusion: Embracing the Kindle Experience Samsung L2digital Camera User Guide Kindle books Samsung L2digital Camera User Guide, with their inherent convenience, flexibility, and vast array of titles, have unquestionably transformed the way we experience literature. They offer readers the liberty to explore the limitless realm of written expression, whenever, everywhere. As we continue to navigate the ever-evolving digital scene, E-book books stand as testament to the persistent power of storytelling, ensuring that the joy of reading remains reachable to all.

https://crm.avenza.com/results/detail/index.jsp/oracle%20application%20server%20installation%20guide.pdf

Table of Contents Samsung L2digital Camera User Guide

1. Understanding the eBook Samsung L2digital Camera User Guide
    - The Rise of Digital Reading Samsung L2digital Camera User Guide
    - Advantages of eBooks Over Traditional Books
2. Identifying Samsung L2digital Camera User Guide
    - Exploring Different Genres
    - Considering Fiction vs. Non-Fiction
    - Determining Your Reading Goals
3. Choosing the Right eBook Platform
    - Popular eBook Platforms
    - Features to Look for in an Samsung L2digital Camera User Guide
    - User-Friendly Interface
4. Exploring eBook Recommendations from Samsung L2digital Camera User Guide
    - Personalized Recommendations
    - Samsung L2digital Camera User Guide User Reviews and Ratings
    - Samsung L2digital Camera User Guide and Bestseller Lists
5. Accessing Samsung L2digital Camera User Guide Free and Paid eBooks
    - Samsung L2digital Camera User Guide Public Domain eBooks
    - Samsung L2digital Camera User Guide eBook Subscription Services
    - Samsung L2digital Camera User Guide Budget-Friendly Options
6. Navigating Samsung L2digital Camera User Guide eBook Formats
    - ePub, PDF, MOBI, and More
    - Samsung L2digital Camera User Guide Compatibility with Devices
    - Samsung L2digital Camera User Guide Enhanced eBook Features
7. Enhancing Your Reading Experience
    - Adjustable Fonts and Text Sizes of Samsung L2digital Camera User Guide
    - Highlighting and Note-Taking Samsung L2digital Camera User Guide
    - Interactive Elements Samsung L2digital Camera User Guide
8. Staying Engaged with Samsung L2digital Camera User Guide

    - Joining Online Reading Communities
    - Participating in Virtual Book Clubs
    - Following Authors and Publishers Samsung L2digital Camera User Guide
9. Balancing eBooks and Physical Books Samsung L2digital Camera User Guide
    - Benefits of a Digital Library
    - Creating a Diverse Reading Collection Samsung L2digital Camera User Guide
10. Overcoming Reading Challenges
    - Dealing with Digital Eye Strain
    - Minimizing Distractions
    - Managing Screen Time
11. Cultivating a Reading Routine Samsung L2digital Camera User Guide
    - Setting Reading Goals Samsung L2digital Camera User Guide
    - Carving Out Dedicated Reading Time
12. Sourcing Reliable Information of Samsung L2digital Camera User Guide
    - Fact-Checking eBook Content of Samsung L2digital Camera User Guide
    - Distinguishing Credible Sources
13. Promoting Lifelong Learning
    - Utilizing eBooks for Skill Development
    - Exploring Educational eBooks
14. Embracing eBook Trends
    - Integration of Multimedia Elements
    - Interactive and Gamified eBooks

Samsung L2digital Camera User Guide Introduction

Samsung L2digital Camera User Guide Offers over 60,000 free eBooks, including many classics that are in the public domain. Open Library: Provides access to over 1 million free eBooks, including classic literature and contemporary works. Samsung L2digital Camera User Guide Offers a vast collection of books, some of which are available for free as PDF downloads, particularly older books in the public domain. Samsung L2digital Camera User Guide : This website hosts a vast collection of scientific articles, books, and textbooks. While it operates in a legal gray area due to copyright issues, its a popular resource for finding various publications. Internet Archive for Samsung L2digital Camera User Guide : Has an extensive collection of

digital content, including books, articles, videos, and more. It has a massive library of free downloadable books. Free-eBooks Samsung L2digital Camera User Guide Offers a diverse range of free eBooks across various genres. Samsung L2digital Camera User Guide Focuses mainly on educational books, textbooks, and business books. It offers free PDF downloads for educational purposes. Samsung L2digital Camera User Guide Provides a large selection of free eBooks in different genres, which are available for download in various formats, including PDF. Finding specific Samsung L2digital Camera User Guide, especially related to Samsung L2digital Camera User Guide, might be challenging as theyre often artistic creations rather than practical blueprints. However, you can explore the following steps to search for or create your own Online Searches: Look for websites, forums, or blogs dedicated to Samsung L2digital Camera User Guide, Sometimes enthusiasts share their designs or concepts in PDF format. Books and Magazines Some Samsung L2digital Camera User Guide books or magazines might include. Look for these in online stores or libraries. Remember that while Samsung L2digital Camera User Guide, sharing copyrighted material without permission is not legal. Always ensure youre either creating your own or obtaining them from legitimate sources that allow sharing and downloading. Library Check if your local library offers eBook lending services. Many libraries have digital catalogs where you can borrow Samsung L2digital Camera User Guide eBooks for free, including popular titles.Online Retailers: Websites like Amazon, Google Books, or Apple Books often sell eBooks. Sometimes, authors or publishers offer promotions or free periods for certain books.Authors Website Occasionally, authors provide excerpts or short stories for free on their websites. While this might not be the Samsung L2digital Camera User Guide full book , it can give you a taste of the authors writing style.Subscription Services Platforms like Kindle Unlimited or Scribd offer subscription-based access to a wide range of Samsung L2digital Camera User Guide eBooks, including some popular titles.

FAQs About Samsung L2digital Camera User Guide Books

How do I know which eBook platform is the best for me? Finding the best eBook platform depends on your reading preferences and device compatibility. Research different platforms, read user reviews, and explore their features before making a choice. Are free eBooks of good quality? Yes, many reputable platforms offer high-quality free eBooks, including classics and public domain works. However, make sure to verify the source to ensure the eBook credibility. Can I read eBooks without an eReader? Absolutely! Most eBook platforms offer webbased readers or mobile apps that allow you to read eBooks on your computer, tablet, or smartphone. How do I avoid digital eye strain while reading eBooks? To prevent digital eye strain, take regular breaks, adjust the font size and background color, and ensure proper lighting while reading eBooks. What the advantage of interactive eBooks? Interactive eBooks incorporate multimedia elements, quizzes, and activities, enhancing the reader engagement and providing a more immersive learning experience. Samsung L2digital Camera User

Guide is one of the best book in our library for free trial. We provide copy of Samsung L2digital Camera User Guide in digital format, so the resources that you find are reliable. There are also many Ebooks of related with Samsung L2digital Camera User Guide. Where to download Samsung L2digital Camera User Guide online for free? Are you looking for Samsung L2digital Camera User Guide PDF? This is definitely going to save you time and cash in something you should think about. If you trying to find then search around for online. Without a doubt there are numerous these available and many of them have the freedom. However without doubt you receive whatever you purchase. An alternate way to get ideas is always to check another Samsung L2digital Camera User Guide. This method for see exactly what may be included and adopt these ideas to your book. This site will almost certainly help you save time and effort, money and stress. If you are looking for free books then you really should consider finding to assist you try this. Several of Samsung L2digital Camera User Guide are for sale to free while some are payable. If you arent sure if the books you would like to download works with for usage along with your computer, it is possible to download free trials. The free guides make it easy for someone to free access online library for download books to your device. You can get free download on free trial for lots of books categories. Our library is the biggest of these that have literally hundreds of thousands of different products categories represented. You will also see that there are specific sites catered to different product types or categories, brands or niches related with Samsung L2digital Camera User Guide. So depending on what exactly you are searching, you will be able to choose e books to suit your own need. Need to access completely for Campbell Biology Seventh Edition book? Access Ebook without any digging. And by having access to our ebook online or by storing it on your computer, you have convenient answers with Samsung L2digital Camera User Guide To get started finding Samsung L2digital Camera User Guide, you are right to find our website which has a comprehensive collection of books online. Our library is the biggest of these that have literally hundreds of thousands of different products represented. You will also see that there are specific sites catered to different categories or niches related with Samsung L2digital Camera User Guide So depending on what exactly you are searching, you will be able tochoose ebook to suit your own need. Thank you for reading Samsung L2digital Camera User Guide. Maybe you have knowledge that, people have search numerous times for their favorite readings like this Samsung L2digital Camera User Guide, but end up in harmful downloads. Rather than reading a good book with a cup of coffee in the afternoon, instead they juggled with some harmful bugs inside their laptop. Samsung L2digital Camera User Guide is available in our book collection an online access to it is set as public so you can download it instantly. Our digital library spans in multiple locations, allowing you to get the most less latency time to download any of our books like this one. Merely said, Samsung L2digital Camera User Guide is universally compatible with any devices to read.

Find Samsung L2digital Camera User Guide :

oracle application server installation guide
~~oracle data guard 11gr2 administration beginner s guide~~
opinion essay format for kids
operator manual for bobcat s175
operation manual workforce xlt 2900 aerial lift
operating manual for honeywell thermostat
~~operators manual for snapper riding mower~~
~~operating system concepts 8th edition ppt~~
operators manual jcb 1cx
operations management collier and evans solution manual
optoma ml300 user manual
operating manual palm pre
operations management solutions manual by jay heizer
oracle apps student guide
operating room manual

Samsung L2digital Camera User Guide :

The Economics of Money Banking and Financial Markets Find step-by-step solutions and answers to The Economics of Money Banking ... 10th Edition, you'll learn how to solve your toughest homework problems. Our ... Economics of Money Banking and Financial Markets 10th ... Mar 15, 2023 — Economics of Money Banking and Financial Markets 10th Edition Mishkin Solutions ... questions, the answers are quite complete. Many instructors ... Economics Of Money Banking And Financial Markets 10th ... View Economics Of Money Banking And Financial Markets 10th Edition By Mishkin - Test Bank.docx from ECO MISC at Strayer University ... Answer: A Ques Status: ... Solution Manual The Economics of Money Banking and ... Solution Manual The Economics of Money Banking and Financial Markets 10th Edition by Frederic S. Mishkin ; Ten Habits that will get you ahead of ... Answers of mishkin 2 - PART THREE Answers to End-of- ... 66 Mishkin • The Economics of Money, Banking, and Financial Markets, Tenth Edition. Chapter 3. ANSWERS TO QUESTIONS. Since a lot of other assets have liquidity ... The Economics of Money, Banking, and Financial Markets ... Access The Economics of Money, Banking, and Financial Markets 10th Edition solutions now. Our solutions are written by Chegg experts so you can be assured ... Test Bank

For Economics of Money Banking and Financial ... D) -10%. Answer: D Ques Status: Previous Edition AACSB: Analytic ... Economics of Money Banking and Financial Markets 10th Edition by Mishkin ISBN Test Bank. Test-Bank-for-Economics-of-Money-Banking-and-Financial ... Oct 30, 2023 — Frequently asked questions · What do I get when I buy this document? · Satisfaction guarantee: how does it work? · Who am I buying these notes from ... Chapter 4 Problem 8Q Solution | The Economics Of Money, ... Access The Economics of Money, Banking and Financial Markets 10th Edition Chapter 4 Problem 8Q solution now. Our solutions are written by Chegg experts so ... Economics Of Money Banking And Financial Markets 10th ... Mar 23, 2022 — Exam (elaborations) - Economics of money banking and financial markets 10th edition by mishkin - test bank. ... Questions & answers. Subjects. GE 29875 User Manual - Digital Answering System Digital messaging system (2 pages). Free GE Answering Machine User Manuals GE Answering Machine 2-9991. General Electric Caller ID & Digital Messaging System Owner's Manual. Pages: 24. See Prices. GE Answering ... GE 29875 Answering Machine User Manual Phone manuals and free pdf instructions. Find the user manual you need for your phone and more at ManualsOnline. GE 29888GE1 USER MANUAL Pdf Download View and Download GE 29888GE1 user manual online. Digital Messaging System. 29888GE1 telephone pdf manual download. Also for: 29888. GE Digital Messaging System GE Digital Messaging System identified by the model number 29875GE1 GE 29875GE1 troubleshooting, repair, and service manuals. Owner's Manuals and Installation Instructions - GE Appliance GE Appliance - Owner's Manuals and Installation Instructions. GE Appliances has offered many types of products over the past decades. You may have a newer ... GE Digital Messaging System Instructions Record Greeting and Listening to Messages. Once the machine is set up you can record your greeting. Press and hold the "Greeting" button until you hear a tone. I have a GE 29831A Digital Telephone Answering System. ... Aug 26, 2019 — Hi,. Please find the manual attached - page 10 shows how to fit the batteries. I hope that helps, Best Regards,. Rich. How to operate a Ge answering machine model no. ... Aug 31, 2009 — I have a GE Digital Messaging System telephone answering device. I have a GE Digital Messaging System telephone answering device. It's brand ... GE 29875GE1-B Digital Answering System Test ... - YouTube The Bat and the Crocodile : An Aboriginal Story When Crocodile is very close, Bat spears and kills him. Bat is chased to his cave by the other animals, who throw their spears: the marks of which can be seen ... The Bat and the Crocodile (An Aboriginal Story) by Jacko ... It was that sacred time when the land, water, trees, animals, sacred sites and people came to be. Our ancestors have passed on the Dreamtime to us through our ... The bat and the crocodile : an Aboriginal story The Dreamtime is about the beginning. Ancestors have passed on the Dreamtime through culture, law, language, song and dance. This story is about the bat and ... The bat and the crocodile: An Aboriginal Story The bat and the crocodile: An Aboriginal Story · Book overview. "The Bat and the Crocodile" by Jacko Dolumyu ... An Aboriginal Story: The Bat and the Crocodile This story comes from the Aboriginal people at Warmun (Turkey Creek) in Western Australia. It was told in the Kija language by Jacko Dolumyu and then in English ... The Bat and the Crocodile (Aboriginal Story An) The Bat

and the Crocodile (Aboriginal Story An) · Buy New. $20.68$20.68. FREE delivery: Jan 5 - 23. Ships from: GrandEagleRetail. Sold by: GrandEagleRetail. The bat and the crocodile : an Aboriginal story / told by ... The bat and the crocodile : an Aboriginal story / told by Jacko Dolumyu and Hector Sandaloo ; compiled by Pamela Lofts ... You may copy under some circumstances, ... Aboriginal Dreamtime Stories The Bat and the Crocodile This booklet is designed to compliment a themed unit about Aboriginal Dreamtime stories. These activities are based on the story The Bat and the Crocodile.