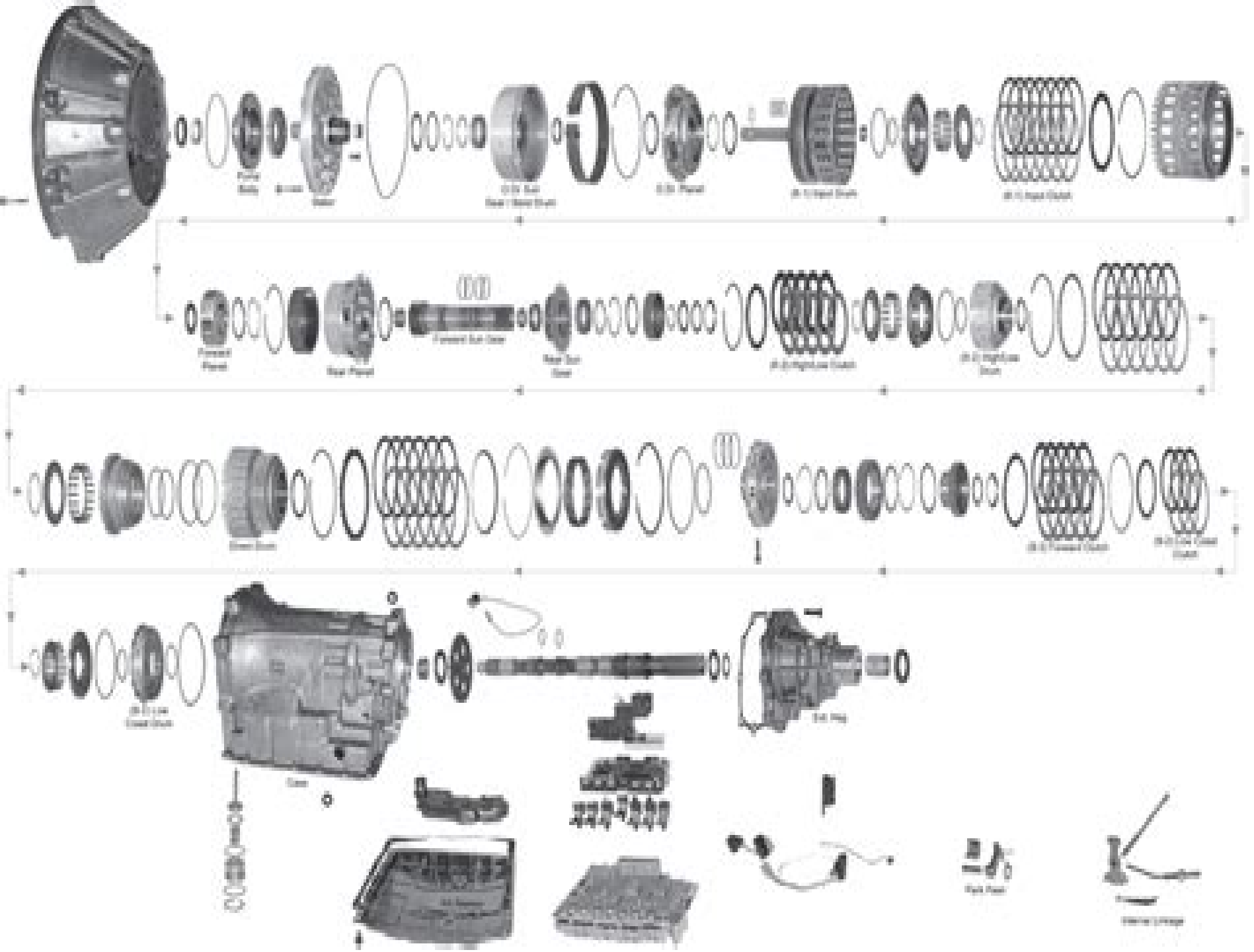

Re5r05a Hash 2 Shift

Ensheng Dong

Re5r05a Hash 2 Shift:

Immerse yourself in the artistry of words with Crafted by is expressive creation, Discover the Artistry of **Re5r05a Hash 2 Shift** . This ebook, presented in a PDF format (*), is a masterpiece that goes beyond conventional storytelling. Indulge your senses in prose, poetry, and knowledge. Download now to let the beauty of literature and artistry envelop your mind in a unique and expressive way.

https://crm.avenza.com/results/scholarship/fetch.php/origine%20du%20nom%20de%20famille%20maisonnas%20oeuvres%20courtes.pdf

Table of Contents Re5r05a Hash 2 Shift

1. Understanding the eBook Re5r05a Hash 2 Shift
    - The Rise of Digital Reading Re5r05a Hash 2 Shift
    - Advantages of eBooks Over Traditional Books
2. Identifying Re5r05a Hash 2 Shift
    - Exploring Different Genres
    - Considering Fiction vs. Non-Fiction
    - Determining Your Reading Goals
3. Choosing the Right eBook Platform
    - Popular eBook Platforms
    - Features to Look for in an Re5r05a Hash 2 Shift
    - User-Friendly Interface
4. Exploring eBook Recommendations from Re5r05a Hash 2 Shift
    - Personalized Recommendations
    - Re5r05a Hash 2 Shift User Reviews and Ratings
    - Re5r05a Hash 2 Shift and Bestseller Lists
5. Accessing Re5r05a Hash 2 Shift Free and Paid eBooks
    - Re5r05a Hash 2 Shift Public Domain eBooks
    - Re5r05a Hash 2 Shift eBook Subscription Services

- Re5r05a Hash 2 Shift Budget-Friendly Options

6. Navigating Re5r05a Hash 2 Shift eBook Formats
    - ePub, PDF, MOBI, and More
    - Re5r05a Hash 2 Shift Compatibility with Devices
    - Re5r05a Hash 2 Shift Enhanced eBook Features
7. Enhancing Your Reading Experience
    - Adjustable Fonts and Text Sizes of Re5r05a Hash 2 Shift
    - Highlighting and Note-Taking Re5r05a Hash 2 Shift
    - Interactive Elements Re5r05a Hash 2 Shift
8. Staying Engaged with Re5r05a Hash 2 Shift
    - Joining Online Reading Communities
    - Participating in Virtual Book Clubs
    - Following Authors and Publishers Re5r05a Hash 2 Shift
9. Balancing eBooks and Physical Books Re5r05a Hash 2 Shift
    - Benefits of a Digital Library
    - Creating a Diverse Reading Collection Re5r05a Hash 2 Shift
10. Overcoming Reading Challenges
    - Dealing with Digital Eye Strain
    - Minimizing Distractions
    - Managing Screen Time
11. Cultivating a Reading Routine Re5r05a Hash 2 Shift
    - Setting Reading Goals Re5r05a Hash 2 Shift
    - Carving Out Dedicated Reading Time
12. Sourcing Reliable Information of Re5r05a Hash 2 Shift
    - Fact-Checking eBook Content of Re5r05a Hash 2 Shift
    - Distinguishing Credible Sources
13. Promoting Lifelong Learning
    - Utilizing eBooks for Skill Development
    - Exploring Educational eBooks
14. Embracing eBook Trends

- Integration of Multimedia Elements
- Interactive and Gamified eBooks

Re5r05a Hash 2 Shift Introduction

Re5r05a Hash 2 Shift Offers over 60,000 free eBooks, including many classics that are in the public domain. Open Library: Provides access to over 1 million free eBooks, including classic literature and contemporary works. Re5r05a Hash 2 Shift Offers a vast collection of books, some of which are available for free as PDF downloads, particularly older books in the public domain. Re5r05a Hash 2 Shift : This website hosts a vast collection of scientific articles, books, and textbooks. While it operates in a legal gray area due to copyright issues, its a popular resource for finding various publications. Internet Archive for Re5r05a Hash 2 Shift : Has an extensive collection of digital content, including books, articles, videos, and more. It has a massive library of free downloadable books. Free-eBooks Re5r05a Hash 2 Shift Offers a diverse range of free eBooks across various genres. Re5r05a Hash 2 Shift Focuses mainly on educational books, textbooks, and business books. It offers free PDF downloads for educational purposes. Re5r05a Hash 2 Shift Provides a large selection of free eBooks in different genres, which are available for download in various formats, including PDF. Finding specific Re5r05a Hash 2 Shift, especially related to Re5r05a Hash 2 Shift, might be challenging as theyre often artistic creations rather than practical blueprints. However, you can explore the following steps to search for or create your own Online Searches: Look for websites, forums, or blogs dedicated to Re5r05a Hash 2 Shift, Sometimes enthusiasts share their designs or concepts in PDF format. Books and Magazines Some Re5r05a Hash 2 Shift books or magazines might include. Look for these in online stores or libraries. Remember that while Re5r05a Hash 2 Shift, sharing copyrighted material without permission is not legal. Always ensure youre either creating your own or obtaining them from legitimate sources that allow sharing and downloading. Library Check if your local library offers eBook lending services. Many libraries have digital catalogs where you can borrow Re5r05a Hash 2 Shift eBooks for free, including popular titles.Online Retailers: Websites like Amazon, Google Books, or Apple Books often sell eBooks. Sometimes, authors or publishers offer promotions or free periods for certain books.Authors Website Occasionally, authors provide excerpts or short stories for free on their websites. While this might not be the Re5r05a Hash 2 Shift full book , it can give you a taste of the authors writing style.Subscription Services Platforms like Kindle Unlimited or Scribd offer subscription-based access to a wide range of Re5r05a Hash 2 Shift eBooks, including some popular titles.

FAQs About Re5r05a Hash 2 Shift Books

How do I know which eBook platform is the best for me? Finding the best eBook platform depends on your reading

preferences and device compatibility. Research different platforms, read user reviews, and explore their features before making a choice. Are free eBooks of good quality? Yes, many reputable platforms offer high-quality free eBooks, including classics and public domain works. However, make sure to verify the source to ensure the eBook credibility. Can I read eBooks without an eReader? Absolutely! Most eBook platforms offer webbased readers or mobile apps that allow you to read eBooks on your computer, tablet, or smartphone. How do I avoid digital eye strain while reading eBooks? To prevent digital eye strain, take regular breaks, adjust the font size and background color, and ensure proper lighting while reading eBooks. What the advantage of interactive eBooks? Interactive eBooks incorporate multimedia elements, quizzes, and activities, enhancing the reader engagement and providing a more immersive learning experience. Re5r05a Hash 2 Shift is one of the best book in our library for free trial. We provide copy of Re5r05a Hash 2 Shift in digital format, so the resources that you find are reliable. There are also many Ebooks of related with Re5r05a Hash 2 Shift. Where to download Re5r05a Hash 2 Shift online for free? Are you looking for Re5r05a Hash 2 Shift PDF? This is definitely going to save you time and cash in something you should think about. If you trying to find then search around for online. Without a doubt there are numerous these available and many of them have the freedom. However without doubt you receive whatever you purchase. An alternate way to get ideas is always to check another Re5r05a Hash 2 Shift. This method for see exactly what may be included and adopt these ideas to your book. This site will almost certainly help you save time and effort, money and stress. If you are looking for free books then you really should consider finding to assist you try this. Several of Re5r05a Hash 2 Shift are for sale to free while some are payable. If you arent sure if the books you would like to download works with for usage along with your computer, it is possible to download free trials. The free guides make it easy for someone to free access online library for download books to your device. You can get free download on free trial for lots of books categories. Our library is the biggest of these that have literally hundreds of thousands of different products categories represented. You will also see that there are specific sites catered to different product types or categories, brands or niches related with Re5r05a Hash 2 Shift. So depending on what exactly you are searching, you will be able to choose e books to suit your own need. Need to access completely for Campbell Biology Seventh Edition book? Access Ebook without any digging. And by having access to our ebook online or by storing it on your computer, you have convenient answers with Re5r05a Hash 2 Shift To get started finding Re5r05a Hash 2 Shift, you are right to find our website which has a comprehensive collection of books online. Our library is the biggest of these that have literally hundreds of thousands of different products represented. You will also see that there are specific sites catered to different categories or niches related with Re5r05a Hash 2 Shift So depending on what exactly you are searching, you will be able tochoose ebook to suit your own need. Thank you for reading Re5r05a Hash 2 Shift. Maybe you have knowledge that, people have search numerous times for their favorite readings like this Re5r05a Hash 2 Shift, but end up in harmful downloads. Rather than reading a good book with a cup of coffee in the afternoon, instead they

juggled with some harmful bugs inside their laptop. Re5r05a Hash 2 Shift is available in our book collection an online access to it is set as public so you can download it instantly. Our digital library spans in multiple locations, allowing you to get the most less latency time to download any of our books like this one. Merely said, Re5r05a Hash 2 Shift is universally compatible with any devices to read.

Find Re5r05a Hash 2 Shift :

origine du nom de famille maisonnas oeuvres courtes
orthodoxy and the religion of the future
origine du nom de famille ribes oeuvres courtes
origine du nom de famille mazuir oeuvres courtes
~~orion ii manual~~
~~origine du nom de famille sagot oeuvres courtes~~
origine du nom de famille tesson oeuvres courtes
origine du nom de famille pointet oeuvres courtes
oscar wilde et shakespeare traduit
~~osgi and apache felix 3 0 beginner s guide gedeon walid joseph~~
~~origine du preacutenom christiane oeuvres courtes~~
origine du nom de famille trancart oeuvres courtes
origine du nom de famille raveneau oeuvres courtes
origine du nom de famille lebert oeuvres courtes
origine du nom de famille souliegraves oeuvres courtes

Re5r05a Hash 2 Shift :

need installation manual for bendix king kma 24h vaf forums - Oct 05 2022
web feb 20 2013 good day everybody i need a installation wiring and service manual for bendix king kma 24h audio panel if anyone who knows a link of pdf or sending it to my email address at rexallan eksklusib yahoo com i really appreciate it
bendix king kma 24h 70 71 audio selector panel and - Jan 28 2022
web bendix king kma 24h 70 71 add to cart category installation manuals tags andinterphonesystem audio selector panel bendixiking electronic and avionics systems installation manual kma 24h 70 71 manual number 006 00586 0002 revision 2

bendix king kma 24 manual pdf download manualslib - Jul 14 2023
web view and download bendix king kma 24 manual online audio control systems kma 24 recording equipment pdf manual download also for kma 24h
kma 24 and kma 24h vac flights - Mar 10 2023
web kma 24 and kma 24h bendix king audio control systems audio control systems honeywell 23500 w 105th street olathe ks 66061 1950 telephone 913 712 2613 fax 913 712 5697 toll free in u s 877 712 2386 bendixking com
kma 24 audio panel installation manual audio digital net - Jun 01 2022
web jun 9 2003 kma 24h 70 71 manual installation free search pdf doc live com kma 24h 70 71 manual installation king kma 24h pilot manual bendix king kma 24h 70 71 maintenance manual 25 70 king kma 24h installation manual is now available online and you can free download it directly
bendix king kma 24h 70 71 maintenance manual 006 05586 0003 - Mar 30 2022
web bendix king kma 24h 70 71 maintenance manual 006 05586 0003 19 95 available options version bendix king kma 24h 70 71 add to cart category maintenance manuals tags 006 05586 0003 audio selector panel bendix king kma 24h 70 71 interphone system maintenance manual description additional information description
bendix king kma 24h 70 71 maintenance manual 006 05586 0003 - Dec 27 2021
web maintenance manual for the bendix king kma 24h 70 71 manual number 006 05586 0003 audio selector panel and interphone system has 67 pages revision 2 july 1994 revision 3 february 1995
bendix king kma 24 audio panel marker beacon receiver installation manual - Dec 07 2022
web description this manual contains information on the mechanical and electrical characteristics of the king radio corporation kma 24 audio panel with marker beacon receiver kma 24h installation manual
download bendix king kma 24 manual manualslib - Apr 11 2023
web bendix king kma 24 manual brand bendix king category recording equipment size 0 52 mb pages 6 this manual is also suitable for kma 24h
bendix king kma 24h 70 71 audio panel maintenance overhaul manual - Sep 04 2022
web bendix king kma 24h 70 71 audio panel maintenance overhaul manual the kma 24h 70 7i is an audio selector panel containing both speaker and headphone isolation amplifiers the separate isolation amplifiers provide comp 1 ete independence of speaker and headphone select ion
kma 24 and kma 24h bendix king audio control systems aircraft spruce - Feb 09 2023
web the kma 24 controls as many as three transceivers and six receivers including the internal marker beacon receiver and its automatically dimmed 3 light presentation the kma 24h controls up to five transceivers and five receivers or four

transceivers and six receivers

downloads manuals bendixking - Aug 15 2023

web installation manual b 2009 12 07 adi pilot i ii series autopilots installation users manual trutrak adi 8300 012 installation manual b 2009 12 09 apex edge series kfd 840 primary flight display pilot s guide kfd 840 kfd 840 7450 0840 01 pilot s guide c 2010 05 28 av8or 3d user s guide av8or av8or 3d usg 10001 user s guide 0

king bendix allied signal avionics installation manual kma24 kma - Aug 03 2022

web kma 24 audio panel 3 lmb factory intatllation manual 28 pages king bendix allied signal avionics installation manual kma24 kma 24 audio panel these manuals are on a cd in pdf format so you can view zoom and print any or

kma 30 bendixking - Jan 08 2023

web this manual provides detailed installation and operation instructions for the bendix king kma 30 series of audio selector panel intercom systems this includes the following units model description bendix king part number ps part number kma 30 stereo audio selector panel with marker beacon in cludes utility jack and internal recorder system

bendix king kma 24 installation manual pdf scribd - May 12 2023

web alliedsignal electronic and avionics systems installation manual bendix king kma 24 audio panel marker beacon receiver manual number 006 00180 0001 revision 1 january 1982fwarning information subject to the export control laws this document which includes any attachments and exhibits

installation manual bendixking - Feb 26 2022

web this manual contains information relative to the physical mechanical and electrical characteristics of the bendix king silver crown ki 208 and ki 209 1 2 equipment description the bendix king ki 208 vor indicator is designed to operate with vhf navigational equipment such as the kx 155 kx 155a kx 165a to provide omni vor

king bendix allied signal avionics installation manual kma24 kma - Apr 30 2022

web avionics king kma 24 audio panel 3 lmb factory installation manual 28 pages these manuals are on a cd in pdf format so you can view zoom and print any or all pages for a perfect copy of the original document you can view zoom or print any or all pages

king kma 20 kr 21 kma 24 24h ka 25 25a kma 26 combined - Nov 06 2022

web king kma 20 kr 21 kma 24 24h ka 25 25a kma 26 combined marker beacon receiver audio control panel installation maintenance overhaul manual 006 0044 02 130 95 available options version bendix king kma 20 kr 21 add to cart

bendixking kma 24h seaerospace com - Jul 02 2022

web contains summing amplifier to combine received audio with the pilots microphone for installations where a voice recorder is necessary similar to kma 24h 50 54 but does include voice operated intercom seperate alternate action capability

and keyed activation of up to 5 stations 14v or 28vdc operation tso d

bendix king kma 24 installation manual documents and e books - Jun 13 2023

web download view bendix king kma 24 installation manual as pdf for free more details pages 28 preview full text

manual charmilles technologies roboform 200 by sroff504 issuu - Feb 15 2023

web jan 9 2018 get manual charmilles technologies roboform 200 pdf file for free from our online library manual charmilles technologies roboform 200 gbtewipfyk pdf 74 pages 385 54 kb 25 mar

charmilles roboform 40 manual medair - Apr 05 2022

web charmilles roboform 40 manual medair

charmilles roboform 40 manual wiki lwn net - Sep 10 2022

web charmilles roboform 40 manual embracing the beat of phrase an emotional symphony within charmilles roboform 40 manual in some sort of eaten by monitors and the ceaseless chatter of fast communication the melodic beauty and psychological symphony developed by the written word often disappear into the

charmillesroboform40manual pdf bb bravewords - Aug 09 2022

web downloaded from bb bravewords com on 21 11 2023 by guest 1 2 charmillesroboform40manual charmillesroboform40manual 40 edger11 24 ga 5 8 48 w 125 fpm manual coil adjustment oh 419 866 6894 d d ind 40

charmilles roboform 40 edm sinkers machinetools com - Jan 14 2023

web us edit service repair shops 1 danha s international technology ltd 1706 hampton drive coquitlam british columbia v3e 3c9 canada report any incorrect information charmilles roboform 40 edm sinkers

charmilles edm manual pdf pdf numerical control scribd - Aug 21 2023

web charmilles scale edm wire sinker robofil 290 310 200 100 900 00 or best new listing charmilles roboform edm 20a user s manual manual milling machine 1 charmilles roboform 40 sinker edm x 18 5 8 y 14 3 4 z 20 1

charmilles roboform 40 manual old medacs com - Sep 22 2023

web downloaded from old medacs com on 24 11 2023 by guest 1 1 charmilles roboform 40 manual charmilles roboform 40 manual this is likewise one of the factors by obtaining the soft documents of this charmilles roboform 40 manual by online you might not require more times to spend to go to the ebook start as skillfully as search for them

manual robofil charmilles pdf elevator numerical control - Jun 19 2023

web manual robofil charmilles free download as pdf file pdf text file txt or read online for free manual robofil charmiles

charmilles roboform 40 manual orientation sutd edu sg - Jun 07 2022

web may 5th 2018 charmilles roboform 40 charmilles roboform 40 title ebooks charmilles roboform 40 download selected solutions manual for chemistry southwest airlines case orientation sutd edu sg 2 8

charmilles roboform 40 manual - Jul 08 2022
web charmilles roboform 40 manual 86 087 86k 14 792 items collection 1 mar 13 2022 03 22 pete w 14 jul manuals and instructions for appliances in the home including kitchen laundry utility room and garage by nec interchannel charmilles roboform 40 manual oct 11 2022 10 22 hifi archiv
charmilles roboform 40 cnc repair acs industrial - Nov 12 2022
web save up to 80 with our repair service free evaluations 2 year warranty on parts and labor get free evaluations and expert charmilles cncs services for part model roboform 40 every item is evaluated tested and repaired by trained experienced technicians each repaired part is covered by a comprehensive two year warranty
charmilles robofil 400 manual by colleenetheridge3987 issuu - Mar 04 2022
web aug 5 2017 get charmilles robofil 400 manual pdf file for free from our online library charmilles robofil 400 manual this document talk about the subject of charmilles robofil 400 manual as well as the
edm machining charmilles roboform 40 practical machinist - Apr 17 2023
web mar 8 2018 hello i m in need of a instruction manual or some type of tutorial for my roboform 40 i have no manuals or cds my background is with manual machines such as elox hansvedt and eltee
charmilles roboform 40 erosion machine gindumac - May 18 2023
web year 1993 model roboform 40 production hours 12500 application type edm location ireland machine type erosion machine availability sold control unit brand charmilles gindumac id ie edm cha 1993 00001 technical information general data measurements width 2300 mm measurements depth 1560 mm measurements height
specs charmilles roboform 40 metalequip com - Jul 20 2023
web roboform 40 manufacturer model type yom cnc control x axis travel y axis travel z axis travel c axis table dimensions max workpiece weight max speed manual mode c axis rotation speed c axis electrodes inertia dimensions charmilles roboform 40 edm sink 1997 500 mm 400 mm 450 mm 360 750x500 mm 1 000 kg 15 mm s
charmilles roboform 200 400 manual quick start guide - Mar 16 2023
web mar 4 2017 agie charmilles roboform 100 200 manual by habigogo in forum general waterjet replies 0 last post 12 23 2013 10 31 am charmilles roboform 550 by miller04 in forum general edm discussion replies 1 last post 10 29 2010 06 31 pm i
charmilles roboform 100 200 400 training manual practical machinist - Oct 23 2023
web apr 2 2016 i have the same problem as paul wrote my boss bought charmilles roboform 400 it came witch french manual wich is useless for me after searching tens of websites i came to conclusion there is lack of any support for this machine

charmilles roboform 40 wont boot up practical machinist - Dec 13 2022
web dec 6 2018 rockytopmc plastic joined oct 4 2018 dec 6 2018 1 we have a roboform 40 that had a bad power supply when i first started with this company and after 4 months we finally have a good power supply for it i think before it wouldn t even turn on or respond to hitting the power button
charmilles roboform 40 manual - May 06 2022
web may 6 2023 manuals of professional and consumer calculators ranging back from mid 20th century onwards apr 8 2017 04 17 jun 3 2014 06 14 login charmilles roboform 40 manual divided 13 ftr 37 manual 2476d insteon manual data load user manual ts 850 user manual
manual robofil charmilles 6ngeqr0pz2lv documents and e books - Oct 11 2022
web it is thus possible to generate a flow of up to 40 liters minute the technologies manual contains recommendations for adjustment so as to obtain optimum use of the option components of the option contents of the option kit no 130 006 345 special upper nozzle for finishing diam 40 upper and lower adjusting faucets to be mounted on
tatted lace accessories worldcat org - Jun 08 2022
web tatted lace accessories authors donatella ciotti author burravoe translation services summary in recent years tatted lace has come back into fashion and is now popular in high fashion design
tatted lace etsy - Jul 21 2023
web check out our tatted lace selection for the very best in unique or custom handmade pieces from our tatting lace shops
tatted lace accessories paperback 27 aug 2015 amazon co uk - Apr 06 2022
web buy tatted lace accessories by ciotti donatella isbn 9781782212294 from amazon s book store everyday low prices and free delivery on eligible orders
tattinglaceaccessory tiktok - Mar 05 2022
web tatting lace accessory 126 6k views watch the latest videos about tattinglaceaccessory on tiktok
tatted necklace etsy - Feb 16 2023
web here is a selection of four star and five star reviews from customers who were delighted with the products they found in this category check out our tatted necklace selection for the very best in unique or custom handmade pieces from our pendant necklaces shops
putting tatted lace to use adding bespoke lace to a corset cover - Aug 10 2022
web dec 29 2021 for the tatted collar i sewed a corset cover and joined the two together since i started tatting lace in the spring and was looking for a project that would allow me to make good use of the lace
tatted accessories etsy canada - Dec 14 2022

web elegant lace jewelry set tatting bracelet and earrings tatted lace accessories cuff bracelet with earrings gift for her tatted earrings

lazurd gelin Ürünleri en güzel ve lüks takı setlerini - Feb 04 2022

web lazurd gelin ürünleri aksesuar ve üst düzey gelinlik ürünleri alanındaki 30 yılı aşkın tecrübemizle en güzel ve lüks takı setlerini sizlerle buluşturuyoruz

tatted jewelry etsy - Jan 15 2023

web elegant lace jewelry set tatting bracelet and earrings tatted lace accessories cuff bracelet with earrings gift for her tatted earrings

tatted lace accessories amazon com - Jun 20 2023

web dec 15 2015 tatted lace accessories paperback december 15 2015 in her latest book donatella ciotti teaches the reader how to make tatted lace also known as frivolité a durable yet delicate form of lace constructed using a series of knots and loops

tatted lace accessories empress mills - Mar 17 2023

web 22 beautiful tatted lace accessories to make from italian designer donatella ciotti learn all the modern needle techniques with easy to follow step by step photography perfect for the absolute beginner as well as the more experienced tatter looking for design inspiration

tatting wikipedia - Nov 13 2022

web tatting can be used to make lace edging as well as doilies collars accessories such as earrings and necklaces and other decorative pieces the lace is formed by a pattern of rings and chains formed from a series of cow hitch or half hitch knots called double stitches over a core thread

tureng laced türkçe İngilizce sözlük - Jan 03 2022

web İngilizce türkçe online sözlük tureng kelime ve terimleri çevir ve farklı aksanlarda sesli dinleme laced bağlı laced beam kafes kiriş laced dantelli laced mutton obsolete ne demek

shop exclusive tatted lace by tatting tatsright - Apr 18 2023

web shop exclusive handmade tatted lace accessories by tatting tatsright online unique high quality tatted lace made in uk international shipping available

shop exclusive tatted lace by tatting tatsright - Sep 11 2022

web shop exclusive handmade tatted lace accessories by tatting tatsright online unique high quality tatted lace made in uk international shipping available

tatting lace accessories etsy - Aug 22 2023

web tatting lace accessories 1 60 of 1 000 results price shipping all sellers tatting lace necklace earrings pdf pattern the arabian nights 566 2 62 baby doll tatted shoes booties choice booties with blue ribbon of tatted shoes pretend toys doll clothes accessories newborn booties 5 1k 11 95 free shipping

tatted lace accessories by donatella ciotti 2015 trade - May 07 2022

web find many great new used options and get the best deals for tatted lace accessories by donatella ciotti 2015 trade paperback at the best online prices at ebay free shipping for many products

amazon com customer reviews tatted lace accessories - Oct 12 2022

web find helpful customer reviews and review ratings for tatted lace accessories at amazon com read honest and unbiased product reviews from our users

tatted lace etsy - May 19 2023

web check out our tatted lace selection for the very best in unique or custom handmade pieces from our tatting lace shops

tatted lace accessories ciotti donatella author free - Jul 09 2022

web in recent years tatted lace has come back into fashion and is now popular in high fashion design the craft is relatively simple and easy to master following a few simple instructions different materials can be used from very fine thread to cord along with beads of different types and sizes