POWER-MATE JR. MODEL: 116.C85PAUX0VU06 INCLUDED WITH CANISTER.

POWER-MATE® Model: 116.59912990

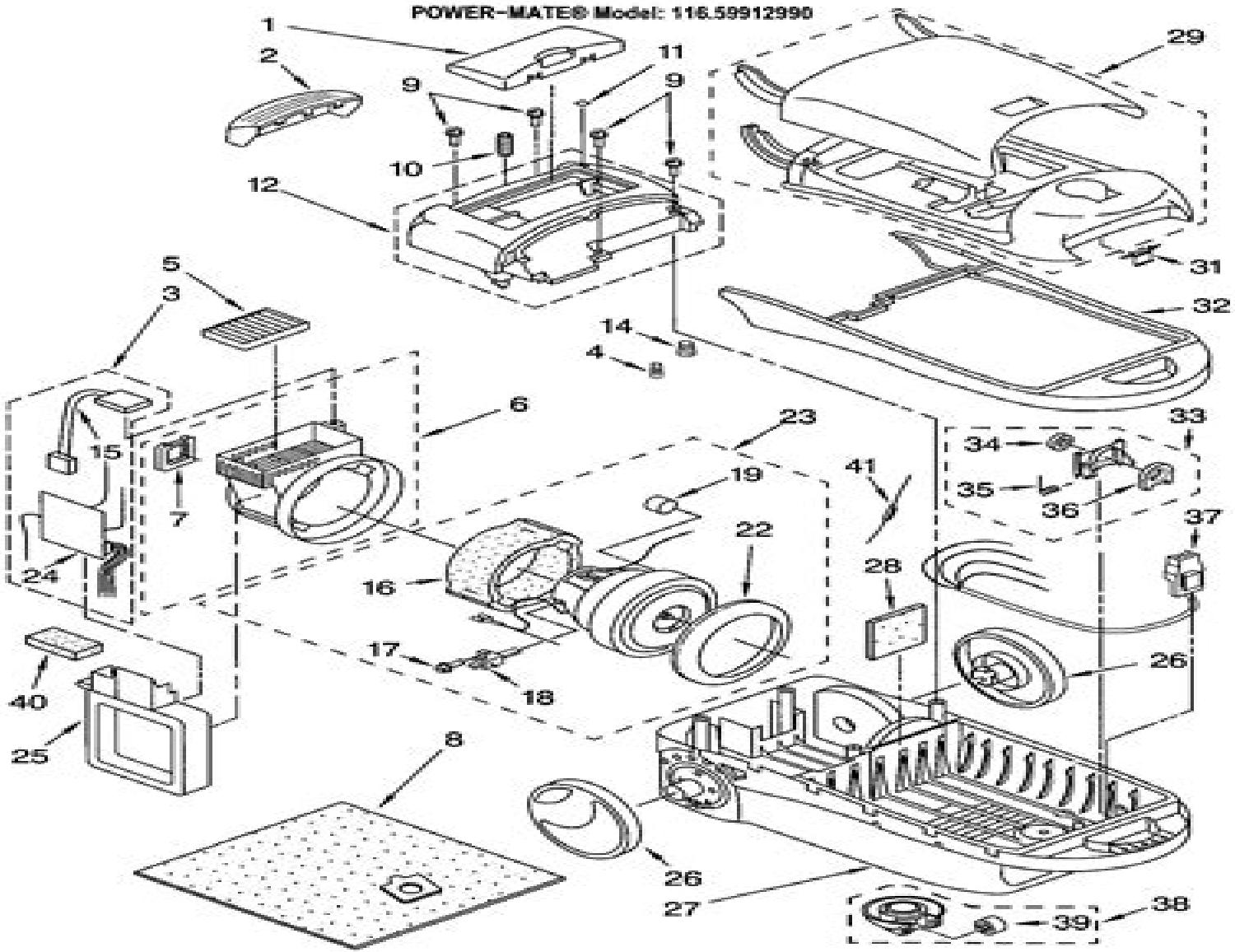

3/02

Owners Manual J90plsdm

ML Morrison

Owners Manual J90plsdm:

Recognizing the quirk ways to acquire this ebook **Owners Manual J90plsdm** is additionally useful. You have remained in right site to start getting this info. get the Owners Manual J90plsdm member that we offer here and check out the link.

You could purchase guide Owners Manual J90plsdm or get it as soon as feasible. You could quickly download this Owners Manual J90plsdm after getting deal. So, past you require the books swiftly, you can straight acquire it. Its so very easy and thus fats, isnt it? You have to favor to in this appearance

https://crm.avenza.com/files/book-search/Documents/osez_le_management_de_limplicite.pdf

Table of Contents Owners Manual J90plsdm

1. Understanding the eBook Owners Manual J90plsdm
    - The Rise of Digital Reading Owners Manual J90plsdm
    - Advantages of eBooks Over Traditional Books
2. Identifying Owners Manual J90plsdm
    - Exploring Different Genres
    - Considering Fiction vs. Non-Fiction
    - Determining Your Reading Goals
3. Choosing the Right eBook Platform
    - Popular eBook Platforms
    - Features to Look for in an Owners Manual J90plsdm
    - User-Friendly Interface
4. Exploring eBook Recommendations from Owners Manual J90plsdm
    - Personalized Recommendations
    - Owners Manual J90plsdm User Reviews and Ratings
    - Owners Manual J90plsdm and Bestseller Lists
5. Accessing Owners Manual J90plsdm Free and Paid eBooks
    - Owners Manual J90plsdm Public Domain eBooks

    - Owners Manual J90plsdm eBook Subscription Services
    - Owners Manual J90plsdm Budget-Friendly Options
6. Navigating Owners Manual J90plsdm eBook Formats
    - ePub, PDF, MOBI, and More
    - Owners Manual J90plsdm Compatibility with Devices
    - Owners Manual J90plsdm Enhanced eBook Features
7. Enhancing Your Reading Experience
    - Adjustable Fonts and Text Sizes of Owners Manual J90plsdm
    - Highlighting and Note-Taking Owners Manual J90plsdm
    - Interactive Elements Owners Manual J90plsdm
8. Staying Engaged with Owners Manual J90plsdm
    - Joining Online Reading Communities
    - Participating in Virtual Book Clubs
    - Following Authors and Publishers Owners Manual J90plsdm
9. Balancing eBooks and Physical Books Owners Manual J90plsdm
    - Benefits of a Digital Library
    - Creating a Diverse Reading Collection Owners Manual J90plsdm
10. Overcoming Reading Challenges
    - Dealing with Digital Eye Strain
    - Minimizing Distractions
    - Managing Screen Time
11. Cultivating a Reading Routine Owners Manual J90plsdm
    - Setting Reading Goals Owners Manual J90plsdm
    - Carving Out Dedicated Reading Time
12. Sourcing Reliable Information of Owners Manual J90plsdm
    - Fact-Checking eBook Content of Owners Manual J90plsdm
    - Distinguishing Credible Sources
13. Promoting Lifelong Learning
    - Utilizing eBooks for Skill Development
    - Exploring Educational eBooks

14. Embracing eBook Trends
    - Integration of Multimedia Elements
    - Interactive and Gamified eBooks

Owners Manual J90plsdm Introduction

In this digital age, the convenience of accessing information at our fingertips has become a necessity. Whether its research papers, eBooks, or user manuals, PDF files have become the preferred format for sharing and reading documents. However, the cost associated with purchasing PDF files can sometimes be a barrier for many individuals and organizations. Thankfully, there are numerous websites and platforms that allow users to download free PDF files legally. In this article, we will explore some of the best platforms to download free PDFs. One of the most popular platforms to download free PDF files is Project Gutenberg. This online library offers over 60,000 free eBooks that are in the public domain. From classic literature to historical documents, Project Gutenberg provides a wide range of PDF files that can be downloaded and enjoyed on various devices. The website is user-friendly and allows users to search for specific titles or browse through different categories. Another reliable platform for downloading Owners Manual J90plsdm free PDF files is Open Library. With its vast collection of over 1 million eBooks, Open Library has something for every reader. The website offers a seamless experience by providing options to borrow or download PDF files. Users simply need to create a free account to access this treasure trove of knowledge. Open Library also allows users to contribute by uploading and sharing their own PDF files, making it a collaborative platform for book enthusiasts. For those interested in academic resources, there are websites dedicated to providing free PDFs of research papers and scientific articles. One such website is Academia.edu, which allows researchers and scholars to share their work with a global audience. Users can download PDF files of research papers, theses, and dissertations covering a wide range of subjects. Academia.edu also provides a platform for discussions and networking within the academic community. When it comes to downloading Owners Manual J90plsdm free PDF files of magazines, brochures, and catalogs, Issuu is a popular choice. This digital publishing platform hosts a vast collection of publications from around the world. Users can search for specific titles or explore various categories and genres. Issuu offers a seamless reading experience with its user-friendly interface and allows users to download PDF files for offline reading. Apart from dedicated platforms, search engines also play a crucial role in finding free PDF files. Google, for instance, has an advanced search feature that allows users to filter results by file type. By specifying the file type as "PDF," users can find websites that offer free PDF downloads on a specific topic. While downloading Owners Manual J90plsdm free PDF files is convenient, its important to note that copyright laws must be respected. Always ensure that the PDF files you download are legally available for free. Many authors and publishers voluntarily provide free PDF versions of their work, but its essential to be cautious and

verify the authenticity of the source before downloading Owners Manual J90plsdm. In conclusion, the internet offers numerous platforms and websites that allow users to download free PDF files legally. Whether its classic literature, research papers, or magazines, there is something for everyone. The platforms mentioned in this article, such as Project Gutenberg, Open Library, Academia.edu, and Issuu, provide access to a vast collection of PDF files. However, users should always be cautious and verify the legality of the source before downloading Owners Manual J90plsdm any PDF files. With these platforms, the world of PDF downloads is just a click away.

FAQs About Owners Manual J90plsdm Books

How do I know which eBook platform is the best for me? Finding the best eBook platform depends on your reading preferences and device compatibility. Research different platforms, read user reviews, and explore their features before making a choice. Are free eBooks of good quality? Yes, many reputable platforms offer high-quality free eBooks, including classics and public domain works. However, make sure to verify the source to ensure the eBook credibility. Can I read eBooks without an eReader? Absolutely! Most eBook platforms offer web-based readers or mobile apps that allow you to read eBooks on your computer, tablet, or smartphone. How do I avoid digital eye strain while reading eBooks? To prevent digital eye strain, take regular breaks, adjust the font size and background color, and ensure proper lighting while reading eBooks. What the advantage of interactive eBooks? Interactive eBooks incorporate multimedia elements, quizzes, and activities, enhancing the reader engagement and providing a more immersive learning experience. Owners Manual J90plsdm is one of the best book in our library for free trial. We provide copy of Owners Manual J90plsdm in digital format, so the resources that you find are reliable. There are also many Ebooks of related with Owners Manual J90plsdm. Where to download Owners Manual J90plsdm online for free? Are you looking for Owners Manual J90plsdm PDF? This is definitely going to save you time and cash in something you should think about.

Find Owners Manual J90plsdm :

osez le management de limplicite
origine du nom de famille naulleau oeuvres courtes
origine du nom de famille remond oeuvres courtes
origine du nom de famille vergez oeuvres courtes
~~orion skyquest xt12 manual~~

~~oscillation chapter of12th physics~~
orion car audio hcca 50001 car amplifiers owners manual
origine du nom de famille teyssandier oeuvres courtes
origine du nom de famille mathieu oeuvres courtes
orion keyboards owners manual
ornaments the official guide ornaments of the world
origine du nom de famille noirault oeuvres courtes
origine du nom de famille verneau oeuvres courtes
origine du nom de famille salou oeuvres courtes
oris 67976144174rs watches owners manual

Owners Manual J90plsdm :

Massey Ferguson MF 1105 MF 1135 MF 1155 Tractors Massey Ferguson MF 1105 MF 1135 MF 1155 Tractors Operator's Manual 60 Pages This Manual is available in: Digital Download CONTENTS INSTRUMENTS AND CONTROLS ... Massey Ferguson Mf 1105 1135 1155 Tractor Owners ... Buy Massey Ferguson Mf 1105 1135 1155 Tractor Owners Operators Manual Maintenance Manual: Spare & Replacement Parts - Amazon.com FREE DELIVERY possible ... Massey Ferguson 1105 Tractor Service Manual (IT Shop) Amazon.com: Massey Ferguson 1105 Tractor Service Manual (IT Shop) Massey Ferguson 1105 Tractor Operators Manual We carry new and OEM reprint manuals for your tractor. From owners, operators, parts, repair & service manuals, we have one for your application. Massey ferguson 1105 tractor service parts catalogue ... May 9, 2020 — Massey ferguson 1105 tractor service parts catalogue manual - Download as a PDF or view online for free. Massey Ferguson MF 1105 Operators Manual This is an Operators Manual for the Massey Ferguson MF 1105 with 54 pages of important information pertaining to your Massey Ferguson tractor. Massey Ferguson 1105, 1135, and 1155 Tractor Manual This is the operator's manual for the Massey Ferguson 1105, 1135, and 1155 tractor. Massey Ferguson 1105 Tractor Operators Manual The Operators Manual for Massey Ferguson 1105 Tractor contains 54 pages of helpful and technical information. This manual is a must have for any Massey ... Massey Ferguson 1105 Tractor Service Manual This Massey Ferguson model 1105 Diesel Tractor Service Manual is a digitally enhanced reproduction of the original manufacturer-issued Shop Manual. PLEASE NOTE: ... Massey Ferguson 1105 Tractor Operators Manual This Massey Ferguson model 1105 Diesel Tractor Operator's Manual is a digitally enhanced reproduction of the original manufacturer-issued Owner's Manual. PLEASE ... Pdms 2 scoring manual Peabody developmental motor scales and activity cards. Pdms standard scores. Pdms 2 scoring manual pdf. Publication date: 2000 Age range: Birth through age 5 ... Guidelines to PDMS-2 Raw Scores: • Add

scores from each subtest evaluated. –Example Grasping and Visual-Motor are subtests for fine motor evaluations. Peabody Developmental Motor Scales, Third Edition The PDMS-3 norms are based on an all-new sample of ... There are no tables in the PDMS-3 manual – all scores are calculated using the online scoring system. (PDMS-2) Peabody Developmental Motor Scales, Second ... Benefit. Assesses both qualitative and quantitative aspects of gross and fine motor development in young children; recommends specific interventions ; Norms. Peabody Developmental Motor Scales–Third Edition ... The PDMS-3 Online Scoring and Report System yields four types of normative scores: ... The PDMS-3 norms are based on an all-new sample of 1,452 children who were ... Peabody Developmental Motor Scale (PDMS-2) This subtest measures a child's ability to manipulate balls, such as catching, throwing and kicking · These skills are not apparent until a child is 11 months ... PDMS-2 Peabody Developmental Motor Scales 2nd Edition Access three composite scores: Gross Motor Quotient, Fine Motor Quotient, and Total Motor Quotient. Helps facilitate the child's development in specific skill ... PDMS-2 Peabody Developmental Motor Scales 2nd Edition Norms: Standard Scores, Percentile Ranks, and Age ... Access three composite scores: Gross Motor Quotient, Fine Motor Quotient, and Total Motor Quotient. Peabody Developmental Motor Scales High scores on this composite are made by children with well-developed gross motor abilities. These children would have above average movement and balance ... Exploring Geology - 5th Edition - Solutions and Answers Find step-by-step solutions and answers to Exploring Geology - 9781259929632, as well as thousands of textbooks so you can move forward with confidence. Exploring Geology - 6th Edition - Solutions and Answers Find step-by-step solutions and answers to Exploring Geology - 9781264397310, as well as thousands of textbooks so you can move forward with confidence. Solved Exploring Geology - Chapter 9 Investigation Table 1. Oct 13, 2016 — Answer to Solved Exploring Geology - Chapter 9 Investigation Table 1. Exploring Geology 5th Edition Textbook Solutions Textbook solutions for Exploring Geology 5th Edition Reynolds and others in this series. View step-by-step homework solutions for your homework. Test Bank for Exploring Geology 4th Edition by Reynolds Aug 4, 2018 — Chapter 2 – Investigating Geologic Questions. Test Bank for Exploring Geology 4th Edition by Reynolds Full clear download (no error ... exploring geology Chapter 10 Investigation Worksheet ... To complete this worksheet, see the instructions in the textbook (Chapter 10 Investigation). Table 1. Identification of Features on the Ocean Floor Different ... Exploring Geology 4th Edition - Chapter 3.12 Solutions Access Exploring Geology 4th Edition Chapter 3.12 solutions now. Our solutions are written by Chegg experts so you can be assured of the highest quality! exploring geology Chapter 10 Investigation Worksheet ... exploring geology Chapter 10 Investigation Worksheet: page 4 and C Table 3. Interpreted Relationship Between Adjacent Features Related Possible ... Appendix 2: Answers to Review Questions The following are suggested answers to the review questions at the end of chapters in Physical Geology. Answers to the exercises are provided in Appendix 3. Exploring Geology 4th Edition by Reynolds Johnson Morin ... Exploring Geology 4th Edition by Reynolds Johnson Morin Carter ISBN Solution ... 2.0 Investigating Geologic Questions • 2.1 What Can We Observe in

Landscapes?