1996 Wiring Diagram - Indy XLT / XLT SP / XLT SKS / XLT RMK / 600 XCR

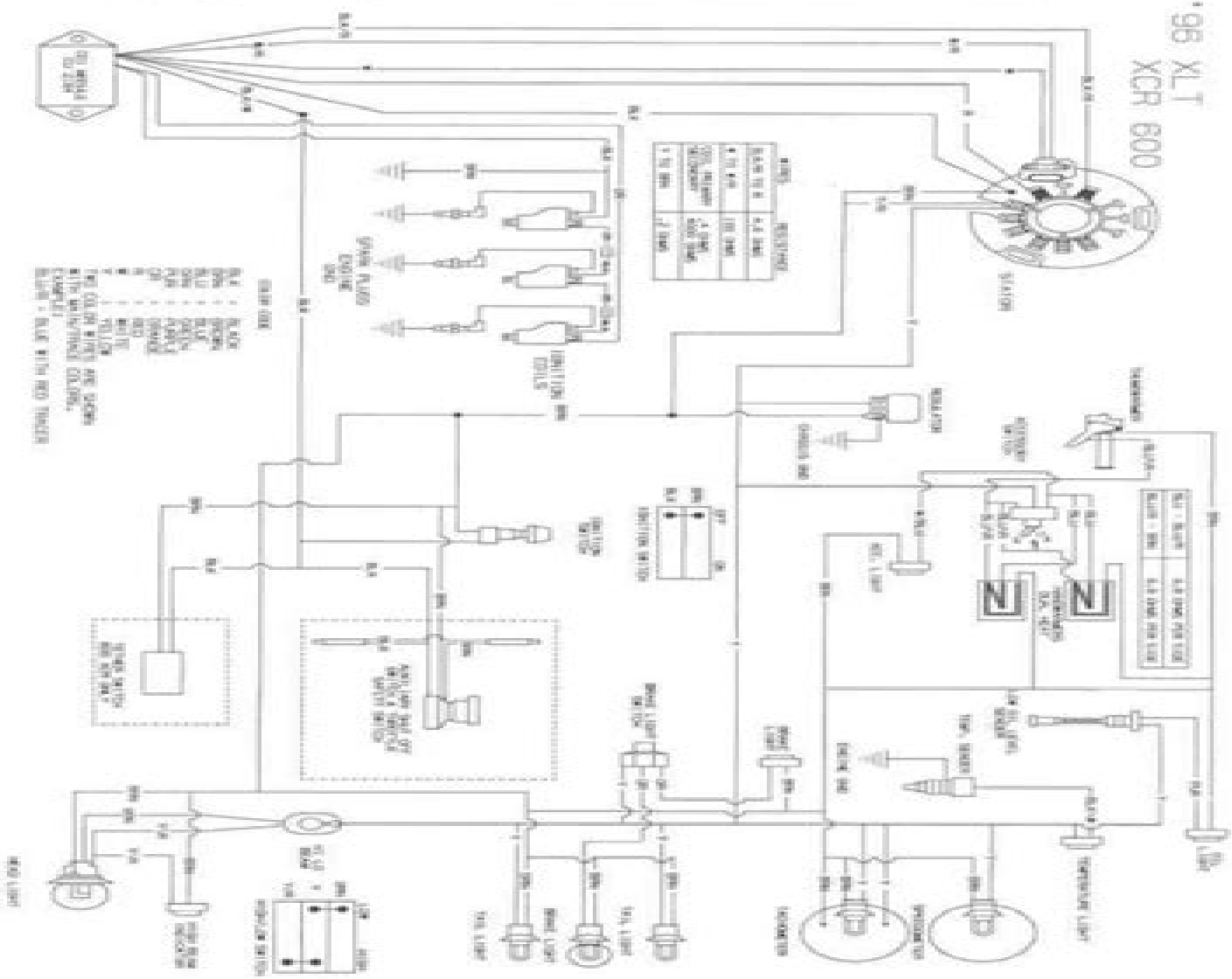

Polaris 96 Indy 5wiring Diagram

David Baud

Polaris 96 Indy 5wiring Diagram:

Whispering the Strategies of Language: An Psychological Quest through **Polaris 96 Indy 5wiring Diagram**

In a digitally-driven earth where displays reign supreme and instant conversation drowns out the subtleties of language, the profound techniques and psychological nuances hidden within words frequently get unheard. Yet, set within the pages of **Polaris 96 Indy 5wiring Diagram** a captivating literary treasure sporting with natural feelings, lies an extraordinary journey waiting to be undertaken. Written by a skilled wordsmith, this enchanting opus invites viewers on an introspective journey, gently unraveling the veiled truths and profound influence resonating within the cloth of every word. Within the psychological depths of the emotional evaluation, we can embark upon a genuine exploration of the book is primary themes, dissect their charming writing fashion, and succumb to the strong resonance it evokes strong within the recesses of readers hearts.

https://crm.avenza.com/data/scholarship/HomePages/Photosmart_D110_User_Guide.pdf

Table of Contents Polaris 96 Indy 5wiring Diagram

1. Understanding the eBook Polaris 96 Indy 5wiring Diagram
    - The Rise of Digital Reading Polaris 96 Indy 5wiring Diagram
    - Advantages of eBooks Over Traditional Books
2. Identifying Polaris 96 Indy 5wiring Diagram
    - Exploring Different Genres
    - Considering Fiction vs. Non-Fiction
    - Determining Your Reading Goals
3. Choosing the Right eBook Platform
    - Popular eBook Platforms
    - Features to Look for in an Polaris 96 Indy 5wiring Diagram
    - User-Friendly Interface
4. Exploring eBook Recommendations from Polaris 96 Indy 5wiring Diagram
    - Personalized Recommendations

    - Polaris 96 Indy 5wiring Diagram User Reviews and Ratings
    - Polaris 96 Indy 5wiring Diagram and Bestseller Lists
5. Accessing Polaris 96 Indy 5wiring Diagram Free and Paid eBooks
    - Polaris 96 Indy 5wiring Diagram Public Domain eBooks
    - Polaris 96 Indy 5wiring Diagram eBook Subscription Services
    - Polaris 96 Indy 5wiring Diagram Budget-Friendly Options
6. Navigating Polaris 96 Indy 5wiring Diagram eBook Formats
    - ePub, PDF, MOBI, and More
    - Polaris 96 Indy 5wiring Diagram Compatibility with Devices
    - Polaris 96 Indy 5wiring Diagram Enhanced eBook Features
7. Enhancing Your Reading Experience
    - Adjustable Fonts and Text Sizes of Polaris 96 Indy 5wiring Diagram
    - Highlighting and Note-Taking Polaris 96 Indy 5wiring Diagram
    - Interactive Elements Polaris 96 Indy 5wiring Diagram
8. Staying Engaged with Polaris 96 Indy 5wiring Diagram
    - Joining Online Reading Communities
    - Participating in Virtual Book Clubs
    - Following Authors and Publishers Polaris 96 Indy 5wiring Diagram
9. Balancing eBooks and Physical Books Polaris 96 Indy 5wiring Diagram
    - Benefits of a Digital Library
    - Creating a Diverse Reading Collection Polaris 96 Indy 5wiring Diagram
10. Overcoming Reading Challenges
    - Dealing with Digital Eye Strain
    - Minimizing Distractions
    - Managing Screen Time
11. Cultivating a Reading Routine Polaris 96 Indy 5wiring Diagram
    - Setting Reading Goals Polaris 96 Indy 5wiring Diagram
    - Carving Out Dedicated Reading Time
12. Sourcing Reliable Information of Polaris 96 Indy 5wiring Diagram
    - Fact-Checking eBook Content of Polaris 96 Indy 5wiring Diagram

    - Distinguishing Credible Sources
13. Promoting Lifelong Learning
    - Utilizing eBooks for Skill Development
    - Exploring Educational eBooks
14. Embracing eBook Trends
    - Integration of Multimedia Elements
    - Interactive and Gamified eBooks

Polaris 96 Indy 5wiring Diagram Introduction

Free PDF Books and Manuals for Download: Unlocking Knowledge at Your Fingertips In todays fast-paced digital age, obtaining valuable knowledge has become easier than ever. Thanks to the internet, a vast array of books and manuals are now available for free download in PDF format. Whether you are a student, professional, or simply an avid reader, this treasure trove of downloadable resources offers a wealth of information, conveniently accessible anytime, anywhere. The advent of online libraries and platforms dedicated to sharing knowledge has revolutionized the way we consume information. No longer confined to physical libraries or bookstores, readers can now access an extensive collection of digital books and manuals with just a few clicks. These resources, available in PDF, Microsoft Word, and PowerPoint formats, cater to a wide range of interests, including literature, technology, science, history, and much more. One notable platform where you can explore and download free Polaris 96 Indy 5wiring Diagram PDF books and manuals is the internets largest free library. Hosted online, this catalog compiles a vast assortment of documents, making it a veritable goldmine of knowledge. With its easy-to-use website interface and customizable PDF generator, this platform offers a user-friendly experience, allowing individuals to effortlessly navigate and access the information they seek. The availability of free PDF books and manuals on this platform demonstrates its commitment to democratizing education and empowering individuals with the tools needed to succeed in their chosen fields. It allows anyone, regardless of their background or financial limitations, to expand their horizons and gain insights from experts in various disciplines. One of the most significant advantages of downloading PDF books and manuals lies in their portability. Unlike physical copies, digital books can be stored and carried on a single device, such as a tablet or smartphone, saving valuable space and weight. This convenience makes it possible for readers to have their entire library at their fingertips, whether they are commuting, traveling, or simply enjoying a lazy afternoon at home. Additionally, digital files are easily searchable, enabling readers to locate specific information within seconds. With a few keystrokes, users can search for keywords, topics, or phrases, making research and finding relevant information a breeze. This efficiency saves time and effort, streamlining the learning process and allowing individuals to focus on extracting the

information they need. Furthermore, the availability of free PDF books and manuals fosters a culture of continuous learning. By removing financial barriers, more people can access educational resources and pursue lifelong learning, contributing to personal growth and professional development. This democratization of knowledge promotes intellectual curiosity and empowers individuals to become lifelong learners, promoting progress and innovation in various fields. It is worth noting that while accessing free Polaris 96 Indy 5wiring Diagram PDF books and manuals is convenient and cost-effective, it is vital to respect copyright laws and intellectual property rights. Platforms offering free downloads often operate within legal boundaries, ensuring that the materials they provide are either in the public domain or authorized for distribution. By adhering to copyright laws, users can enjoy the benefits of free access to knowledge while supporting the authors and publishers who make these resources available. In conclusion, the availability of Polaris 96 Indy 5wiring Diagram free PDF books and manuals for download has revolutionized the way we access and consume knowledge. With just a few clicks, individuals can explore a vast collection of resources across different disciplines, all free of charge. This accessibility empowers individuals to become lifelong learners, contributing to personal growth, professional development, and the advancement of society as a whole. So why not unlock a world of knowledge today? Start exploring the vast sea of free PDF books and manuals waiting to be discovered right at your fingertips.

FAQs About Polaris 96 Indy 5wiring Diagram Books

What is a Polaris 96 Indy 5wiring Diagram PDF? A PDF (Portable Document Format) is a file format developed by Adobe that preserves the layout and formatting of a document, regardless of the software, hardware, or operating system used to view or print it. **How do I create a Polaris 96 Indy 5wiring Diagram PDF?** There are several ways to create a PDF: Use software like Adobe Acrobat, Microsoft Word, or Google Docs, which often have built-in PDF creation tools. Print to PDF: Many applications and operating systems have a "Print to PDF" option that allows you to save a document as a PDF file instead of printing it on paper. Online converters: There are various online tools that can convert different file types to PDF. **How do I edit a Polaris 96 Indy 5wiring Diagram PDF?** Editing a PDF can be done with software like Adobe Acrobat, which allows direct editing of text, images, and other elements within the PDF. Some free tools, like PDFescape or Smallpdf, also offer basic editing capabilities. **How do I convert a Polaris 96 Indy 5wiring Diagram PDF to another file format?** There are multiple ways to convert a PDF to another format: Use online converters like Smallpdf, Zamzar, or Adobe Acrobats export feature to convert PDFs to formats like Word, Excel, JPEG, etc. Software like Adobe Acrobat, Microsoft Word, or other PDF editors may have options to export or save PDFs in different formats. **How do I password-protect a Polaris 96 Indy 5wiring Diagram PDF?** Most PDF editing software allows you to add password protection. In Adobe Acrobat, for instance,

you can go to "File" -> "Properties" -> "Security" to set a password to restrict access or editing capabilities. Are there any free alternatives to Adobe Acrobat for working with PDFs? Yes, there are many free alternatives for working with PDFs, such as: LibreOffice: Offers PDF editing features. PDFsam: Allows splitting, merging, and editing PDFs. Foxit Reader: Provides basic PDF viewing and editing capabilities. How do I compress a PDF file? You can use online tools like Smallpdf, ILovePDF, or desktop software like Adobe Acrobat to compress PDF files without significant quality loss. Compression reduces the file size, making it easier to share and download. Can I fill out forms in a PDF file? Yes, most PDF viewers/editors like Adobe Acrobat, Preview (on Mac), or various online tools allow you to fill out forms in PDF files by selecting text fields and entering information. Are there any restrictions when working with PDFs? Some PDFs might have restrictions set by their creator, such as password protection, editing restrictions, or print restrictions. Breaking these restrictions might require specific software or tools, which may or may not be legal depending on the circumstances and local laws.

Find Polaris 96 Indy 5wiring Diagram :

photosmart d110 user guide
philips hotel tv manual
php and mysql web development 5th edition
phlebotomy essentials study guide
phylogenetic tree pogil answers
philips gogear raga 2gb manual
philips calculator user manual
physic ib hl paper 2013
philips bdp9100 blu ray disc player service manual
philips home phone manual
photoshop 6 keyboard shortcuts morris photographics
philips azur manual
philips bucky diagnost 1 service manual
philips refrigerator user manual
philips e10839 manual

Polaris 96 Indy 5wiring Diagram :

convicted killer who escaped pennsylvania prison spotted more - Jul 21 2021
web sep 10 2023 the convicted killer who escaped from a pennsylvania prison a week and a half ago was sighted overnight more than 20 miles from the area where authorities had
cİhan hocamizdan dİk horon ve gÖrele horonu - Jan 27 2022
web kemençe horon ve tulum kurslarının bir numaralı adresi kemenceminsesi com tr İletişim 0535 929 74 48
schattendamon micah 20 klantenhandboek dutchgiraffe com - Jul 01 2022
web whispering the strategies of language an emotional quest through schattendamon micah 20 in a digitally driven earth where displays reign great and instant interaction
mikhail chamoun mikhailchamoun instagram photos - Dec 26 2021
web fashion designer mikhailchamounfor inquiries and orders contact us at 961 3 34 38 32or send us an email at mikhailchamoun gmail com mikhailchamoun com
this referendum is so important michael long completes 20 day - May 19 2021
web 1 day ago with the prime minister anthony albanese by his side long says he felt overwhelming support from people he encountered on his 20 day walk he urges
schattendamon micah 20 - Apr 10 2023
web schattendamon micah 20 is available in our book collection an online access to it is set as public so you can get it instantly our digital library spans in multiple countries allowing
diyanet namaz takvimi - Nov 24 2021
web takvim ezan fransa st chamond namaz vakitleri st chamond namaz vakitleri 2023 diyanet namaz takvimi st chamond fransa namaz vakitleri st chamond
schattendamon micah 20 pdf trilhoscacao - Nov 05 2022
web schattendamon micah 20 pdf that you are looking for it will totally squander the time however below later you visit this web page it will be consequently definitely simple to
boston cold case a man walked into an fbi office and admitted - Jun 19 2021
web sep 12 2023 john michael irmer 68 was arraigned in a boston courtroom monday and charged with murdering 24 year old susan marcia rose on october 30 1979 according
schattendämon micah 20 by tina filsak - Oct 04 2022
web is 30 micah by dr william s sadler urantia book michah micah chapter 2 tanakh online torah bible full of eyes micah 7 18 20 20 trending micah sermon ideas michah micah

schattendamon micah 20 pdf trilhoscacao - Sep 03 2022
web schattendamon micah 20 pdf thank you definitely much for downloading schattendamon micah 20 pdf most likely you have knowledge that people have see
schattendamon micah 20 copy - Aug 02 2022
web mar 10 2023 schattendamon micah 20 yeah reviewing a ebook schattendamon micah 20 could grow your close associates listings this is just one of the solutions for you to be
20 20 the chameleon tv episode 2020 imdb - Sep 22 2021
web mar 20 2020 the chameleon with david muir amy robach janai norman decades after two barrels containing the bodies of a woman and three children were discovered
tuohys say there was never an intent to adopt michael oher - Apr 17 2021
web 18 hours ago sean and leigh anne tuohy say in a new legal filing that there was never an intent to adopt michael oher and claim he got his 20 share of profits from the film
schattendamon micah 20 paredeslepetitdejeuner panos be - Aug 14 2023
web enter the realm of schattendamon micah 20 a mesmerizing literary masterpiece penned by way of a distinguished author guiding readers on a profound journey to unravel the
schattendã mon micah 20 by tina filsak hope realalternatives - Feb 25 2022
web schattendã mon micah 20 by tina filsak is internationally suitable with any devices to browse alternatively than savoring a fine publication with a cup of infusion in the
tikkun l eil shavuot congregation mishkan israel - Aug 22 2021
web jun 4 2022 join the cmi community to celebrate shavuot and the receiving of the torah
schattendamon micah 20 ftp thechilworth co - May 11 2023
web schattendamon micah 20 is available in our digital library an online access to it is set as public so you can get it instantly our book servers hosts in multiple locations allowing
schattendamon micah 20 pdf pdf kelbycormier org - Mar 09 2023
web jun 16 2023 schattendamon micah 20 pdf is available in our digital library an online access to it is set as public so you can get it instantly our digital library hosts in multiple
schattendämon micah 20 kindle edition amazon de - Jan 07 2023
web select the department you want to search in
schattendämon micah 20 german edition ebook amazon in - May 31 2022
web □ □ □ □ □ □□ □ □ □□ □ □ □ □ □ □□ □ □□□ □ □

schattendämon micah 20 german edition kindle edition - Feb 08 2023
web schattendämon micah 20 german edition ebook filsak tina amazon in kindle store
schattendamon micah 20 book - Dec 06 2022
web schattendamon micah 20 eventually you will unquestionably discover a supplementary experience and realization by spending more cash nevertheless when realize you
schattendamon micah 20 wrbb neu edu - Mar 29 2022
web as this schattendamon micah 20 it ends occurring creature one of the favored book schattendamon micah 20 collections that we have this is why you remain in the best
schattendämon micah 20 by tina filsak goodreads - Jun 12 2023
web schattendämon book read reviews from world s largest community for readers micah und seine mannen arbeiten mit hochdruck daran den schattendämon den
schattendamon micah 20 cornelisfr vanlanschot be - Jul 13 2023
web pages of schattendamon micah 20 a mesmerizing literary creation penned by a celebrated wordsmith readers attempt an enlightening odyssey unraveling the intricate
south florida jury awards 20 million in damages after man s - Oct 24 2021
web sep 14 2023 jurors awarded hamby s widow and young son 20 million in damages for the accidental death the family has begun to share its story in hopes of preventing
schattendämon micah 20 by tina filsak online kptm edu my - Apr 29 2022
web micah life hope amp truth messages on micah 5 desiring god from text to sermon micah 5 2 4 dr claude mariottini micah 2 niv bible woe to those who plan iniquity to sermons
ten minute plays for middle school performers plays for a - Nov 06 2022
web nov 1 2008 ten minute plays for middle school performers royalty free plays for a variety of cast sizes hardcover november 1 2008 by rebecca young author 4 1 out of 5 stars 32 ratings
10 minute plays ten minute plays - Aug 03 2022
web an archive of production tested 10 minute plays production rights scenes for actors monologues online store theatre news links a theatre a literature an artistic expression that does not speak for its own time has no relevance ten minute play structure books on ten minute
ten minute plays for middle school performers - Dec 07 2022
web ten minute plays for middle school performers author rebecca young book 17 95 books and resource forensics speech and debate teaching tools reference guides

ten minute plays for middle school performers plays for a - Feb 09 2023
web nov 1 2008 ten minute plays for middle school performers delivers what it promises and much much more the plays are highly entertaining covering spot on topics that are engaging and pertinent to today s typical middle school kids
ten minute plays for middle school performers plays for a - Jan 08 2023
web ten minute plays for middle school performers plays for a variety of cast sizes by rebecca young ten of the best one act plays to perform with high school may 20th 2020 for many high school teachers it is time to start thinking of what one act play you and your students will prepare for your next festival here
ten minute plays for middle school performers pla pdf pdf - Jan 28 2022
web ten minute plays for middle school performers rebecca young 2008 the plays in this theatre book give teenage performers the chance to reveal the unique identities and motivations of students their own age
ten minute plays for middle school performers plays for a - Apr 30 2022
web jun 7 2023 ten minute plays for middle school performers rebecca royalty free play scripts for middle school and high school kids scripts middle school jr high edies amp parodies alex broun 10 minute plays ten minute plays scripts to find a play discover plays playscripts inc more ten minute plays for
ten minute plays for middle school performers google books - Mar 10 2023
web that s why these ten minute plays are perfect for younger actors and they re royalty free ranging from duos to groups of up to seven the 18 plays in each book offer short age appropriate material and themes that reflect the interests and issues of teens today
ten minute plays for middle school performers plays for a - Jun 01 2022
web jun 12 2023 more ten minute plays for middle school performers plays heuer publishing ten minute plays for middle school original and fun 1 act plays that are free royalty free one act plays alex broun 10 minute plays ten minute plays scripts to more ten minute plays for middle school performers plays 10 minute play celebration
tenminuteplaysformiddleschoolperformerspla download only - Dec 27 2021
web performance based assessment for middle and high school physical education ten minute play series 101 dialogues sketches and skits ten minute play series gather by the ghost light year two 22 comedy ten minute plays royalty free plays for teens and young adults the stage players magazine school library journal sometimes ya just
ten minute plays for middle school performers playwright co - Apr 11 2023
web plays for a variety of cast sizes collects over fifteen short plays designed to be performed by middle school students covering topics including crushes cheating and jealousy themes children s non fiction performing arts
ten minute plays for middle school pioneerdrama com - Oct 05 2022

web ten minute drama plays for middle school pricing 18 25 255 pages 5½ x 8½ paperback special offer save even more when you buy both books for 35 00 isbn textbook comedy plays 978 1 57525 442 5 textbook drama plays 978 1 57525 439 5 additional products available ten minute plays for middle school

ten minute plays for middle school performers archive org - Jul 14 2023

web may 5 2023 ten minute plays for middle school performers plays for a variety of cast sizes by young rebecca 1965 publication date 2008 topics middle school students drama teenagers drama young adult drama american one act plays american publisher colorado springs co meriwether pub collection inlibrary printdisabled

ten minute plays for middle school performers pla pdf free - Feb 26 2022

web short scenes and monologues for middle school actors mary hall surface 1999 a collection of original scenes and monologues written especially for middle school actors more ten minute plays for middle school performers rebecca young 2011 a collection of short plays for speech and drama classrooms forensic competitions or variety shows

ten minute plays for middle school performers plays for a - Jul 02 2022

web plays for middle school performers plays free play scripts the drama teacher 10 minute play celebration durango arts center ten minute plays for middle school performers plays for a ten minute plays for middle school performers plays for original and fun 1 act plays that are free ten minute plays for middle school performers rebecca

ten minute plays for middle school performers stageplays com - Aug 15 2023

web the 10 minute plays in this book give teenage performers the chance to reveal the unique identities and motivations of students their own age they are easily staged with no sets or costumes and include scripts for girls only scripts for boys only and scripts for mixed casts titles include how

ten minutes a list of ten minutes for high schools and middle schools - Sep 04 2022

web the lives of seven teenagers become intertwined in this humorous and oftentimes bittersweet collection of ten minute plays multiple lengths available this collection contains bench warrant brace yourself double click fireworks friend request lazy eye pay phone status update a symphony tumblefur and wheels

ten minute plays for middle school performers pla pdf - May 12 2023

web ten minute plays for middle school performers aug 05 2022 a collection of short plays for speech and drama classrooms forensic competitions or variety shows

10 minute plays for middle school performers open library - Jun 13 2023

web may 6 2023 10 minute plays for middle school performers by rebecca young 2008 meriwether pub meriwether publishing edition in english

theatrefolk s top 10 recommended middle school plays - Mar 30 2022

web we specialize in middle school plays with age appropriate characters and look at the issues middle schoolers are dealing with right now click the link and you ll be taken to the webpage for each play

visuelles wörterbuch schwedisch deutsch mit audio app - Jul 14 2023

web mit 15 000 wörtern in der kostenlosen audio app alle begriffe können in alphabetischer reihenfolge oder nach kategorien sortiert abgespielt werden die app ist nach

visuelles wörterbuch deutsch als fremdsprache wörter und - Dec 27 2021

web visuelles wörterbuch deutsch als fremdsprache wörter und arbeitsbuch mit 6000 vokabeln wörter und arbeitsbuch mit 6000 vokabeln zum eintragen der

visuelles wörterbuch schwedisch deutsch mit audio app - Nov 06 2022

web visuelles wörterbuch schwedisch deutsch mit audio app jedes wort gesprochen bei abebooks de isbn 10 3831029814 isbn 13 9783831029815 dorling kindersley

visuelles wörterbuch schwedisch deutsch mit audio app - Mar 30 2022

web visuelles wörterbuch schwedisch deutsch mit audio app jedes wort gesprochen amazon pl książki

visuelles wörterbuch schwedisch deutsch dussmann das - May 12 2023

web visuelles wörterbuch schwedisch deutsch mit audio app jedes wort gesprochen isbn 9783831029815

visuelles wörterbuch schwedisch deutsch häftad - Aug 03 2022

web mar 23 2017 köp visuelles wörterbuch schwedisch deutsch skickas inom 5 8 vardagar fri frakt över 199 kr välkommen till bokus bokhandel

visuelles wörterbuch schwedisch deutsch thalia - Jun 13 2023

web mar 23 2017 ausgesprochen gut das visuelle wörterbuch schwedisch jetzt auch zum anhören mit 15 000 wörtern in der kostenlosen audio app alle begriffe

visuelles wörterbuch audio app 4 app store - Jan 28 2022

web umfassende wörterbuch app zu 23 sprachen mit jeweils über 15 000 stichwörtern und redewendungen volle vertonung aller wörter durch muttersprachliche sprecher ideal

visuelles wörterbuch schwedisch deutsch mit audio app - Sep 04 2022

web visuelles wörterbuch schwedisch deutsch mit audio app jedes wort gesprochen amazon com au books

visuelles wörterbuch schwedisch deutsch mit audio app - Feb 09 2023

web mar 23 2017 visuelles wörterbuch schwedisch deutsch mit audio app jedes wort gesprochen on amazon com free shipping on qualifying offers visuelles

das neue visuelle wörterbuch dk verlag dorlingkindersley - Feb 26 2022

web mit kostenloser audio app zum anhören aller wörter gesamter inhalt komplett vertont von muttersprachlern gesprochen die kombination von bild und wort erleichtert das

visuelles wörterbuch schwedisch deutsch mit audio app jedes - Oct 25 2021

web visuelles wörterbuch schwedisch deutsch mit audio app pons übersetzungen die nummer 1 für deutsch to arabisch norwegisch wörterbuch online das langenscheidt

visuelles wörterbuch schwedisch deutsch mit audio app jedes - Nov 25 2021

web app das neue visuelle wörterbuch dk verlag pons übersetzungen die nummer 1 für deutsch to arabisch hueber shop katalog startseite visuelles wörterbuch schwedisch

visuelles wörterbuch schwedisch deutsch dussmann das - Dec 07 2022

web ausgesprochen gut das visuelle wörterbuch schwedisch jetzt auch zum anhören mit 15 000 wörtern in der kostenlosen audio app alle begriffe können in

visuelles wörterbuch schwedisch deutsch mit audio app - Mar 10 2023

web visuelles wörterbuch schwedisch deutsch mit audio app jedes wort gesprochen amazon se böcker

visuelles wörterbuch schwedisch deutsch mit audio app - Jan 08 2023

web buy visuelles wörterbuch schwedisch deutsch mit audio app jedes wort gesprochen by isbn 9783831029815 from amazon s book store everyday low prices and free

visuelles wörterbuch schwedisch deutsch mit audio app - Jul 02 2022

web visuelles wörterbuch schwedisch deutsch mit audio app jedes wort gesprochen amazon es libros

visuelles wörterbuch schwedisch deutsch mit audio app - Oct 05 2022

web amazon in buy visuelles wörterbuch schwedisch deutsch mit audio app jedes wort gesprochen book online at best prices in india on amazon in read visuelles

visuelles wörterbuch schwedisch deutsch mit audio app - Aug 15 2023

web visuelles wörterbuch schwedisch deutsch mit audio app jedes wort gesprochen isbn 9783831029815 kostenloser versand für alle bücher mit versand und verkauf

neu visuelles wörterbuch schwedisch bildwörterbuch mit - Jun 01 2022

web neu visuelles wörterbuch schwedisch bildwörterbuch mit audio app finden sie alle bücher von app bei der büchersuchmaschine eurobuch com können sie

visuelles wörterbuch schwedisch deutsch Über 12 000 wörter - Apr 30 2022

web visuelles wörterbuch schwedisch deutsch Über 12 000 wörter und redewendungen Über 6000 wörter und redewendungen coventgarden taschenbuch 1 februar 2010

visuelles wörterbuch schwedisch deutsch mit audio app - Apr 11 2023
web visuelles wörterbuch schwedisch deutsch mit audio app jedes wort gesprochen amazon de books