NOBLELIFT

CE

FE3R16-SMS-001

⚠ Warning

Operators should read and understand this manual and all warning labels on the forklift before using the forklift!
Keep the manual for future reference!

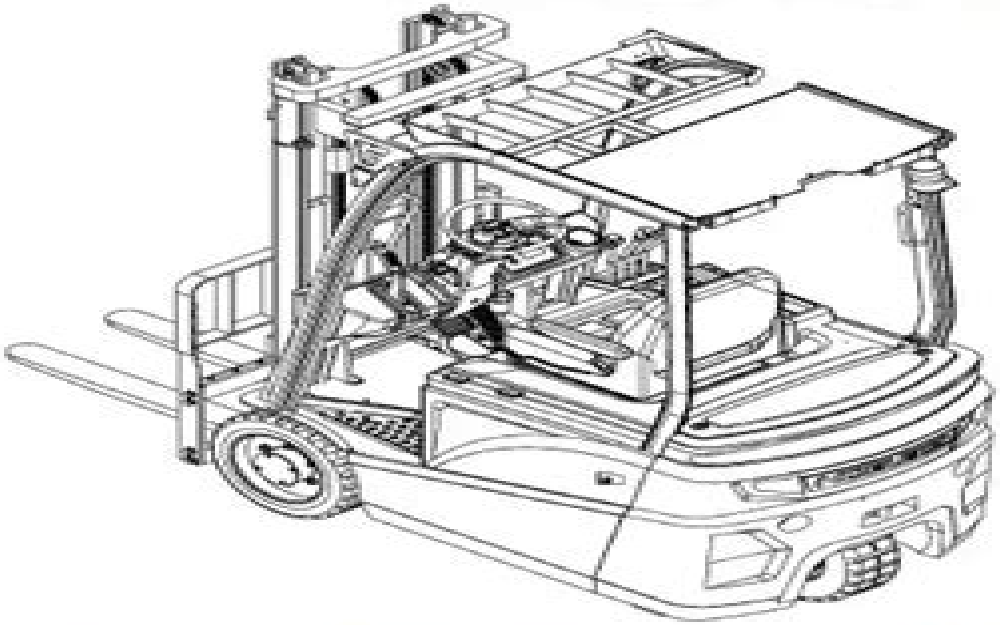

Operation & Maintenance Manual

FE3R16 N/E SERIES

Battery Counterbalanced Forklift Truck

NOBLELIFT INTELLIGENT EQUIPMENT CO.,LTD.

Noble Forklift Manual

Léo Pomar

Noble Forklift Manual:

Federal Rules of Evidence Manual Stephen A. Saltzburg,Michael M. Martin,Daniel J. Capra,1998 A complete guide to the Federal rules of evidence **Preparation for the TOEFL, Software User's Manual** Patricia Noble Sullivan,Grace Yi Qiu Zhong,1996 This is the breakthrough TOEFL study program that international students have been waitikng for The dynamic multimedia CD ROM makes learning English fun and easy No other TOEFL guide can match the power of this revolutionary book CD ROM combination **Moody's International Manual** ,2000 **Material Flow Systems in Manufacturing** J.M. Tanchoco,2012-12-06 This book contains a collection of contributions related to the design and control of material flow systems in manufacturing Material flow systems in manufacturing covers a broad spectrum of topics directly affecting issues related to facilities design material handling and production planning and control In selecting the papers to include in this book the scope was limited to the design and operational control aspects related to the physical move ment of parts tools containers and material handling devices Recent develop ments in this area naturally led to concentration on flow systems involving cellular manufacturing and automated transport equipment such as automated guided vehicles However the concepts discussed have general applicability to a wide range of manufacturing flow problems The book is organized in five major sections 1 design integration and justification 2 cell design and material handling considerations 3 alternative material flow paths 4 operational control problems and 5 tooling requirements and transport equipment **Federal Rules of Evidence Manual: Rules 801-807** Stephen A. Saltzburg,Michael M. Martin,Daniel J. Capra,2002 A complete guide to the Federal rules of evidence **Demand and Prices for Meat** Amos D. Jones,Ellis Brevier Cowling,Harold F. Breimyer,Herbert George Ewan,James William Kimmey,Merton J. Reed,Perry A. Glick,Wayne Ernest Tolle,Lawrence W. Noble,Roald Arnold Peterson,Willis Westlake Wagener,1961 *Labor Relations Reference Manual* ,1976 Mergent International Manual ,2001 *LABOR RELATIONS REFERENCE MANUAL VOLUME 85* ,1974 **Culture and Civilization** Gabriel R. Ricci,2018-02-06 This volume of Culture and Civilization focuses on cosmopolitanism the global polity and political ramifications of globalization The introduction by Gabriel R Ricci establishes context and provides an overview of the entire work Topics include the history of globalization climate change policy ecological consequences of development concepts of civilization human rights Eastern thought and economics global citizenship and travel writing Within this collection Carl J Strikwerda argues that the first era of globalization in modern times was marked by global migrations patterns Pablo Iannone s history of the Andean oil rush and its ecological consequences looks at the processes of development Brett Bowden argues that civilization entails both progress and war J Baird Callicott provides a philosophical analysis of a moral theory that accommodates spatial and temporal scales of climate change Sanjay Paul analyzes the United Nations Global Compact and Ed Chung discusses the role of economic theory in business schools Colin Butler reflects on E F Schumacher s Buddhist Economics while Taso Lagos relates parallel polis to the idea of global citizenship Tony Burns

examines the ways in which Aristotle Hegel and Kant have been interpreted Finally Adam Stauffer explores Charles Warren Stoddard s work South Sea Idyls This volume of Culture and Civilization the first under Ricci s editorship follows the tradition of the previous four volumes developing critical ideas intended to produce a positive intellectual climate one that is prepared to confront challenges and alert us to the opportunities for people in all fields and of all faiths of the twenty first century

The Captivating World of Kindle Books: A Thorough Guide Unveiling the Pros of E-book Books: A Realm of Ease and Flexibility E-book books, with their inherent mobility and ease of availability, have freed readers from the limitations of hardcopy books. Done are the days of lugging cumbersome novels or meticulously searching for particular titles in bookstores. Kindle devices, sleek and lightweight, effortlessly store an extensive library of books, allowing readers to indulge in their preferred reads whenever, anywhere. Whether traveling on a busy train, lounging on a sunny beach, or simply cozying up in bed, E-book books provide an exceptional level of ease. A Reading World Unfolded: Discovering the Vast Array of Kindle Noble Forklift Manual Noble Forklift Manual The Kindle Store, a virtual treasure trove of bookish gems, boasts an wide collection of books spanning varied genres, catering to every readers taste and preference. From captivating fiction and thought-provoking non-fiction to timeless classics and modern bestsellers, the E-book Shop offers an unparalleled abundance of titles to explore. Whether seeking escape through engrossing tales of fantasy and exploration, delving into the depths of historical narratives, or expanding ones understanding with insightful works of scientific and philosophical, the E-book Shop provides a doorway to a bookish universe brimming with endless possibilities. A Game-changing Force in the Bookish Landscape: The Persistent Impact of E-book Books Noble Forklift Manual The advent of Kindle books has undoubtedly reshaped the literary scene, introducing a paradigm shift in the way books are published, disseminated, and read. Traditional publication houses have embraced the online revolution, adapting their strategies to accommodate the growing need for e-books. This has led to a surge in the accessibility of E-book titles, ensuring that readers have access to a wide array of bookish works at their fingers. Moreover, E-book books have democratized entry to books, breaking down geographical limits and offering readers worldwide with similar opportunities to engage with the written word. Regardless of their location or socioeconomic background, individuals can now engross themselves in the intriguing world of books, fostering a global community of readers. Conclusion: Embracing the E-book Experience Noble Forklift Manual Kindle books Noble Forklift Manual, with their inherent ease, flexibility, and wide array of titles, have unquestionably transformed the way we experience literature. They offer readers the liberty to explore the boundless realm of written expression, whenever, everywhere. As we continue to travel the ever-evolving digital landscape, E-book books stand as testament to the lasting power of storytelling, ensuring that the joy of reading remains reachable to all.

https://crm.avenza.com/data/book-search/Download_PDFS/Qualities_Of_A_Good_Persuasive_Essay.pdf

Table of Contents Noble Forklift Manual

1. Understanding the eBook Noble Forklift Manual
    - The Rise of Digital Reading Noble Forklift Manual
    - Advantages of eBooks Over Traditional Books
2. Identifying Noble Forklift Manual
    - Exploring Different Genres
    - Considering Fiction vs. Non-Fiction
    - Determining Your Reading Goals
3. Choosing the Right eBook Platform
    - Popular eBook Platforms
    - Features to Look for in an Noble Forklift Manual
    - User-Friendly Interface
4. Exploring eBook Recommendations from Noble Forklift Manual
    - Personalized Recommendations
    - Noble Forklift Manual User Reviews and Ratings
    - Noble Forklift Manual and Bestseller Lists
5. Accessing Noble Forklift Manual Free and Paid eBooks
    - Noble Forklift Manual Public Domain eBooks
    - Noble Forklift Manual eBook Subscription Services
    - Noble Forklift Manual Budget-Friendly Options
6. Navigating Noble Forklift Manual eBook Formats
    - ePub, PDF, MOBI, and More
    - Noble Forklift Manual Compatibility with Devices
    - Noble Forklift Manual Enhanced eBook Features
7. Enhancing Your Reading Experience
    - Adjustable Fonts and Text Sizes of Noble Forklift Manual
    - Highlighting and Note-Taking Noble Forklift Manual
    - Interactive Elements Noble Forklift Manual
8. Staying Engaged with Noble Forklift Manual

    - Joining Online Reading Communities
    - Participating in Virtual Book Clubs
    - Following Authors and Publishers Noble Forklift Manual
9. Balancing eBooks and Physical Books Noble Forklift Manual
    - Benefits of a Digital Library
    - Creating a Diverse Reading Collection Noble Forklift Manual
10. Overcoming Reading Challenges
    - Dealing with Digital Eye Strain
    - Minimizing Distractions
    - Managing Screen Time
11. Cultivating a Reading Routine Noble Forklift Manual
    - Setting Reading Goals Noble Forklift Manual
    - Carving Out Dedicated Reading Time
12. Sourcing Reliable Information of Noble Forklift Manual
    - Fact-Checking eBook Content of Noble Forklift Manual
    - Distinguishing Credible Sources
13. Promoting Lifelong Learning
    - Utilizing eBooks for Skill Development
    - Exploring Educational eBooks
14. Embracing eBook Trends
    - Integration of Multimedia Elements
    - Interactive and Gamified eBooks

Noble Forklift Manual Introduction

In this digital age, the convenience of accessing information at our fingertips has become a necessity. Whether its research papers, eBooks, or user manuals, PDF files have become the preferred format for sharing and reading documents. However, the cost associated with purchasing PDF files can sometimes be a barrier for many individuals and organizations. Thankfully, there are numerous websites and platforms that allow users to download free PDF files legally. In this article, we will explore some of the best platforms to download free PDFs. One of the most popular platforms to download free PDF files is Project Gutenberg. This online library offers over 60,000 free eBooks that are in the public domain. From classic literature to

historical documents, Project Gutenberg provides a wide range of PDF files that can be downloaded and enjoyed on various devices. The website is user-friendly and allows users to search for specific titles or browse through different categories. Another reliable platform for downloading Noble Forklift Manual free PDF files is Open Library. With its vast collection of over 1 million eBooks, Open Library has something for every reader. The website offers a seamless experience by providing options to borrow or download PDF files. Users simply need to create a free account to access this treasure trove of knowledge. Open Library also allows users to contribute by uploading and sharing their own PDF files, making it a collaborative platform for book enthusiasts. For those interested in academic resources, there are websites dedicated to providing free PDFs of research papers and scientific articles. One such website is Academia.edu, which allows researchers and scholars to share their work with a global audience. Users can download PDF files of research papers, theses, and dissertations covering a wide range of subjects. Academia.edu also provides a platform for discussions and networking within the academic community. When it comes to downloading Noble Forklift Manual free PDF files of magazines, brochures, and catalogs, Issuu is a popular choice. This digital publishing platform hosts a vast collection of publications from around the world. Users can search for specific titles or explore various categories and genres. Issuu offers a seamless reading experience with its user-friendly interface and allows users to download PDF files for offline reading. Apart from dedicated platforms, search engines also play a crucial role in finding free PDF files. Google, for instance, has an advanced search feature that allows users to filter results by file type. By specifying the file type as "PDF," users can find websites that offer free PDF downloads on a specific topic. While downloading Noble Forklift Manual free PDF files is convenient, its important to note that copyright laws must be respected. Always ensure that the PDF files you download are legally available for free. Many authors and publishers voluntarily provide free PDF versions of their work, but its essential to be cautious and verify the authenticity of the source before downloading Noble Forklift Manual. In conclusion, the internet offers numerous platforms and websites that allow users to download free PDF files legally. Whether its classic literature, research papers, or magazines, there is something for everyone. The platforms mentioned in this article, such as Project Gutenberg, Open Library, Academia.edu, and Issuu, provide access to a vast collection of PDF files. However, users should always be cautious and verify the legality of the source before downloading Noble Forklift Manual any PDF files. With these platforms, the world of PDF downloads is just a click away.

FAQs About Noble Forklift Manual Books

What is a Noble Forklift Manual PDF? A PDF (Portable Document Format) is a file format developed by Adobe that preserves the layout and formatting of a document, regardless of the software, hardware, or operating system used to view

or print it. **How do I create a Noble Forklift Manual PDF?** There are several ways to create a PDF: Use software like Adobe Acrobat, Microsoft Word, or Google Docs, which often have built-in PDF creation tools. Print to PDF: Many applications and operating systems have a "Print to PDF" option that allows you to save a document as a PDF file instead of printing it on paper. Online converters: There are various online tools that can convert different file types to PDF. **How do I edit a Noble Forklift Manual PDF?** Editing a PDF can be done with software like Adobe Acrobat, which allows direct editing of text, images, and other elements within the PDF. Some free tools, like PDFescape or Smallpdf, also offer basic editing capabilities. **How do I convert a Noble Forklift Manual PDF to another file format?** There are multiple ways to convert a PDF to another format: Use online converters like Smallpdf, Zamzar, or Adobe Acrobats export feature to convert PDFs to formats like Word, Excel, JPEG, etc. Software like Adobe Acrobat, Microsoft Word, or other PDF editors may have options to export or save PDFs in different formats. **How do I password-protect a Noble Forklift Manual PDF?** Most PDF editing software allows you to add password protection. In Adobe Acrobat, for instance, you can go to "File" -> "Properties" -> "Security" to set a password to restrict access or editing capabilities. Are there any free alternatives to Adobe Acrobat for working with PDFs? Yes, there are many free alternatives for working with PDFs, such as: LibreOffice: Offers PDF editing features. PDFsam: Allows splitting, merging, and editing PDFs. Foxit Reader: Provides basic PDF viewing and editing capabilities. How do I compress a PDF file? You can use online tools like Smallpdf, ILovePDF, or desktop software like Adobe Acrobat to compress PDF files without significant quality loss. Compression reduces the file size, making it easier to share and download. Can I fill out forms in a PDF file? Yes, most PDF viewers/editors like Adobe Acrobat, Preview (on Mac), or various online tools allow you to fill out forms in PDF files by selecting text fields and entering information. Are there any restrictions when working with PDFs? Some PDFs might have restrictions set by their creator, such as password protection, editing restrictions, or print restrictions. Breaking these restrictions might require specific software or tools, which may or may not be legal depending on the circumstances and local laws.

Find Noble Forklift Manual :

~~qualities of a good persuasive essay~~
pygmalion perfekt unverliebt german edition
quelques maux damour eacutecrits du funambule des meacutedias
quadratic quest answer key
px200e vespa service manual
pyramids gina wilson all things algebra 2015
question act 1 file answers the crucible

pygmalion study guide answes
qlink legacy 250 manual
quand notre monde est devenu chreacutetien
quality pro lawn tractor 20hp manual
quadratics angry birds project the parabolic edition
qca 2005ks1 level 3 reading answers
pythagorean theorem worksheet answers holt mcdougal
python quick reference guide

Noble Forklift Manual :

sad bird still sings chords ultimate guitar - Mar 18 2023
web stream sad bird still sings by eloise on desktop and mobile play over 320 million tracks for free on soundcloud
meaning of sad bird still sings by eloise alterman - Sep 12 2022
web oct 15 2019 149 ratings27 reviews sad birds still sing is the highly anticipated book of poetry from anonymous author faraway in less than a year he became one of the most
eloise alterman sad bird still sings lyrics youtube - Jul 22 2023
web may 6 2022 eloise alterman sad bird still sings official audio sad bird the hurting phase out now eloisealterman lnk to her sbid subscribe
eloise alterman sad bird still sings official audio youtube - Jun 21 2023
web nov 6 2018 faraway sad birds still sing 2 is anonymous author faraway s followup book of modern poetry to their debut release sad birds still sing it is a headfirst dive
sad birds still sing quotes by faraway goodreads - Feb 05 2022
web sad birds still sing because they have something to sing about their songs are a way of coping with their sadness and they often find comfort in singing together sometimes
sad birds still sing song and lyrics by miilano spotify - Oct 01 2021

stream sad bird still sings by eloise soundcloud - Feb 17 2023
web faraway sad birds still sing 2 is anonymous author faraway s followup book of modern poetry to their debut release sad birds still sing it is a headfirst dive into the world of
eloise alterman sad bird still sings official lyric video - Nov 02 2021

web listen to sad birds still sing on spotify miilano song 2020 miilano song 2020 listen to sad birds still sing on spotify miilano song 2020 sign up log in home search

sad birds still sing faraway google books - Apr 07 2022

web discover and share books you love on goodreads

sad birds still sing by faraway goodreads - Aug 11 2022

web nov 6 2018 sad birds still sing 2 is anonymous author faraway s followup book of modern poetry to their debut release sad birds still sing it is a headfirst dive into the

sad birds still sing 2 by faraway alibris - Jan 16 2023

web listen to sad bird still sings on spotify eloise alterman song 2022 eloise alterman song 2022 listen to sad bird still sings on spotify eloise alterman song 2022

yasmin palm sad birds still sing lyrics genius lyrics - Oct 13 2022

web may 29 2023 the song sad bird still sings by eloise alterman is a heart wrenching ballad about the pain of heartbreak and the pressure to put on a brave face in public the

sad birds still sing 2 by faraway paperback barnes noble - Jul 10 2022

web listen to sad bird still sings acoustic on spotify tim goodin song 2022

sad bird still sings acoustic song and lyrics by tim goodin - Jun 09 2022

web buy sad birds still sing 2 by faraway isbn 9781729671009 from amazon s book store everyday low prices and free delivery on eligible orders

sad bird still sings eloise alterman shazam - Nov 14 2022

web sep 2 2022 chorus 1 but sad birds still sing they sit on the cherry tree and as you can see even with a broken wing sad birds still sing verse 2 do you see the blossom in

eloise alterman sad bird still sings lyrics genius lyrics - Apr 19 2023

web oct 31 2022 sad bird still sings chords by eloise alterman 274 views added to favorites 16 times difficulty intermediate tuning e a d g b e capo 3rd fret

loading interface goodreads - Mar 06 2022

web sad birds still sing quotes showing 1 5 of 5 my most valuable lessons were not learned in a classroom faraway sad birds still sing a poetry collection

sad birds still sing 2 kindle edition amazon com - Dec 03 2021

web jun 14 2022 about press copyright contact us creators advertise developers terms privacy policy safety how youtube works test new features nfl sunday ticket

sad birds still sing 2 paperback 6 nov 2018 amazon co uk - May 08 2022
web oct 15 2019 in less than a year he became one of the most recognizable figures on the platform he writes instagram farawaypoetry in this book of selected poems and
amazon com sad birds still sing 2 9781729671009 - May 20 2023
web may 6 2022 chorus they don t know my sky is falling they don t know my heart s unraveling cause the show must go on and they all sing along to the sound of a heart
sad birds still sing 2 by faraway goodreads - Aug 23 2023
web may 22 2022 6 9k views 1 year ago lyrics eloisealterman eloise alterman sad bird still sings lyrics download stream sad bird still sings by eloise alterman
best sad birds still sing a celebration of resilience - Jan 04 2022
web nov 8 2018 faraway sad birds still sing 2 is anonymous author faraway s followup book of modern poetry to their debut release sad birds still sing it is a headfirst dive
sad bird still sings song and lyrics by eloise alterman spotify - Dec 15 2022
web listen to sad bird still sings by eloise alterman 1 297 shazams featuring on heartache apple music playlist
model builders manual haynes manuals a practical - Feb 27 2023
web model builders manual haynes manuals a practical introduction to building plastic model construction kits enthusiasts manual mat irvine 9781785215551 abebooks
model builders manual a practical introduction to building plastic - Aug 04 2023
web jul 23 2019 written by renowned modelling expert and tv visual effects designer mat irvine the model builders manual provides a practical guide for both novice and
model builders manual a practical introduction to building plastic - Apr 19 2022
web in the earliest days of the modern model kit when a model kit company decides to produce a new subject the first decision has to be just what that subject is in the earliest
model builders manual a practical guide to building plastic - Jun 21 2022
web dec 30 2019 model builders manual a practical guide to building plastic model construction kits by mat irvine pen sword books
model builders manual a practical introduction to - Oct 06 2023
web jul 23 2019 written by renowned modelling expert and tv visual effects designer mat irvine the model builders manual provides a practical guide for both novice and
model builders manual by mat irvine waterstones - Aug 24 2022

web jul 11 2019 nearly 70 years later despite suffering from ups and downs the vibrant plastic model making scene has grown tremendously and is now a world wide hobby this

model builders manual haynes manuals a practical - Sep 24 2022

web abebooks com model builders manual haynes manuals a practical introduction to building plastic model construction kits enthusiasts manual this manual takes the

model builders manual a practical introduction to building - Jan 29 2023

web jan 28 2020 this manual takes the reader through how modern model kits are designed and manufactured how the scale is decided upon most modern kits are made to

model builders manual by mat irvine open library - Mar 31 2023

web model builders manual a practical introduction to building plastic model construction kits by mat irvine 0 ratings 0 want to read 0 currently reading 0 have read

model builders manual a practical introduction to building plastic - Dec 28 2022

web abebooks com model builders manual a practical introduction to building plastic model construction kits enthusiasts manual book is in new condition model

model builders manual a practical introduction to building plastic - May 01 2023

web written by renowned modelling expert and tv visual effects designer mat irvine the model builders manual provides a practical guide for both novice and experienced model

amazon com customer reviews model builders 39 manual a - Oct 26 2022

web see all details for model builders manual a practical introduction to building your recently viewed items and featured recommendations after viewing product detail pages

a guide to model building for beginners by jin linh medium - Mar 19 2022

web apr 13 2018 model building is a rewarding hobby that anyone can get into there s always something for everyone whether you re into cars and tanks or starships and

model building wikipedia - Feb 15 2022

web a builder working on a model model building is a hobby and career that involves the creation of physical models either from kits or from materials and components acquired

model builders manual a practical introduction to building plastic - Nov 26 2022

web jul 30 2019 booktopia has model builders manual a practical introduction to building plastic model construction kits by mat irvine buy a discounted hardcover of

model builders manual a practical introduction to bui - Jul 03 2023

web jul 23 2019 3 75 4 ratings2 reviews written by renowned modelling expert and tv visual effects designer mat irvine the model builders manual provides a practical guide for

modeller user manual pdf free pdf manuals dl - Jan 17 2022

web modeller user manual the preview only show first 10 pages of manuals please download to view the full documents loading preview please wait submitted by

model builders manual haynes manuals a practical - Sep 05 2023

web jul 5 2019 buy model builders manual haynes manuals a practical introduction to building plastic model construction kits enthusiasts manual by mat irvine isbn

model builders manual a practical introduction to building plastic - May 21 2022

web model making is centuries old but the introduction of polystyrene a stable plastic in the mid 20th century provided the opportunity to make the plastic construction kit

model builders manual a practical introduction to building plastic - Jun 02 2023

web model builders manual a practical introduction to building plastic model construction kits hardcover 11 july 2019 by mat irvine author 4 4 232 ratings

model builders manual a practical introduction to building plastic - Jul 23 2022

web model builders manual a practical introduction to building plastic model construction kits enthusiasts manual irvine mat amazon in books

european legal history a cultural and political pe download - Aug 02 2022

web 4 4 european legal history a cultural and political pe 2020 07 20 parliament explained the eu parliament and the treaty of lisbon 1 7 legal traditions the

randall lesaffer european legal history a cultural - Nov 05 2022

web randall lesaffer european legal history a cultural and political perspective cambridge cambridge university press cambridge org 2009 ix

european legal history cultural and political perspective legal - Aug 14 2023

web jun 25 2009 this historical introduction to the civil law tradition from its original roman roots to the present day considers the political and cultural context of europe s legal

european legal history a cultural and political perspective - Feb 08 2023

web european legal history a cultural and political perspective ebook written by randall lesaffer read this book using google play books app on your pc android ios

european legal history a cultural and political pe pdf - May 31 2022

web apr 17 2023 web19 mar 2023 european legal history a cultural and political pe pdf right here we have countless books european legal history a cultural and political

european legal history a cultural and political pe download - Feb 25 2022

web european legal cultures in transition oxford university press this is a short and succinct summary of the unique position of roman law in european culture by one of the world s

european legal history cambridge university press - Jun 12 2023

web this historical introduction to the civil law tradition from its original roman roots to the present day considers the political and cultural context of europe s legal history

european legal history a cultural and political pe uniport edu - Oct 24 2021

web aug 15 2023 we give european legal history a cultural and political pe and numerous book collections from fictions to scientific research in any way among them is this

european legal history a cultural and political pe uniport edu - Dec 26 2021

web european legal history a cultural and political pe but end up in harmful downloads rather than enjoying a good book with a cup of coffee in the afternoon instead they are

european legal history a cultural and political perspective - Apr 10 2023

web apr 1 2011 sean patrick donlan european legal history a cultural and political perspective american journal of legal history volume 51 issue 2 april 2011 pages

loading interface goodreads - Jan 27 2022

web discover and share books you love on goodreads

politics latest shadow home secretary faces questions as labour - Nov 24 2021

web sep 15 2023 good morning welcome back to the politics hub on this friday 15 september here s what s happening today labour will publish the results of its national

european legal history a cultural and political pe pdf - Sep 03 2022

web aug 14 2023 european legal history randall lesaffer 2009 this historical introduction to the civil law tradition considers the political and cultural context of europe s legal

european legal history a cultural and political pe full pdf - Oct 04 2022

web 2 european legal history a cultural and political pe 2023 07 14 the political and cultural context of europe s legal history political diplomatic and constitutional

european legal history a cultural and political pe peterson s - Mar 29 2022

web european legal history a cultural and political pe right here we have countless ebook european legal history a cultural

and political pe and collections to check out we

european legal history a cultural and political perspective - Jan 07 2023

web jun 25 2009 european legal history a cultural and political perspective randall lesaffer cambridge university press jun 25 2009 history 549 pages the

european legal history a cultural and political perspective - Jul 13 2023

web jul 20 2009 this historical introduction to the civil law tradition from its original roman roots to the present day considers the political and cultural context of europe s legal

european legal history a cultural and political pe pdf - Sep 22 2021

web may 3 2023 web19 mar 2023 european legal history a cultural and political pe pdf right here we have countless books european legal history a cultural and political

european legal history a cultural and political pe - Dec 06 2022

web european legal history randall lesaffer 2009 06 25 this historical introduction to the civil law tradition considers the political and cultural context of europe s legal history

european legal history a cultural and political perspective - Mar 09 2023

web jan 1 2009 the idea of the progress periodisation and the perception of medieval european history from the renaissance to the 19th century in european

european legal history a cultural and political perspective - May 11 2023

web jun 25 2009 request pdf european legal history a cultural and political perspective cambridge core european studies european legal history by

european legal history a cultural and political pe copy - Jul 01 2022

web european legal history a cultural and political pe pdf p e cultural identities and the growth of the world economy the labelling of these substances as 39 legal 39 or 39 illegal 39

european legal history a cultural and political pe pdf - Apr 29 2022

web jun 2 2023 european legal history a cultural and political pe 2 11 downloaded from uniport edu ng on june 2 2023 by guest materials many translated here for the first