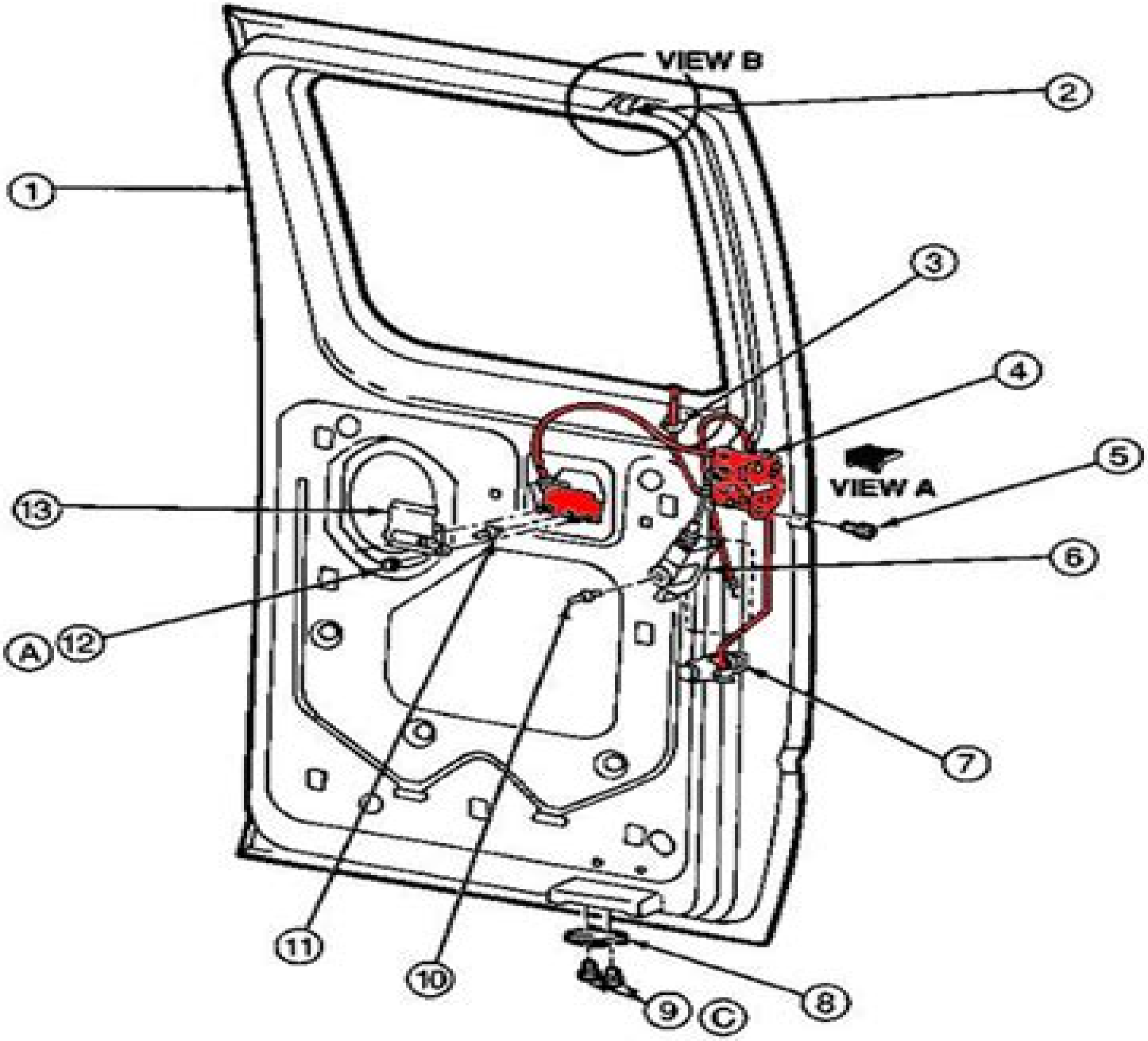

POWER DOOR LOCK SHOWN
MANUAL DOOR LOCK TYPICAL

Schematic For Ford F250 Manual Door Lock

Rachel S Tattersall

Schematic For Ford F250 Manual Door Lock:

Getting the books **Schematic For Ford F250 Manual Door Lock** now is not type of inspiring means. You could not by yourself going behind books accrual or library or borrowing from your contacts to right of entry them. This is an agreed simple means to specifically acquire lead by on-line. This online publication Schematic For Ford F250 Manual Door Lock can be one of the options to accompany you afterward having other time.

It will not waste your time. admit me, the e-book will agreed declare you new event to read. Just invest little era to approach this on-line statement **Schematic For Ford F250 Manual Door Lock** as competently as review them wherever you are now.

https://crm.avenza.com/book/Resources/HomePages/realistic%20fiction%20books%20for%203rd%20graders.pdf

Table of Contents Schematic For Ford F250 Manual Door Lock

1. Understanding the eBook Schematic For Ford F250 Manual Door Lock
    - The Rise of Digital Reading Schematic For Ford F250 Manual Door Lock
    - Advantages of eBooks Over Traditional Books
2. Identifying Schematic For Ford F250 Manual Door Lock
    - Exploring Different Genres
    - Considering Fiction vs. Non-Fiction
    - Determining Your Reading Goals
3. Choosing the Right eBook Platform
    - Popular eBook Platforms
    - Features to Look for in an Schematic For Ford F250 Manual Door Lock
    - User-Friendly Interface
4. Exploring eBook Recommendations from Schematic For Ford F250 Manual Door Lock
    - Personalized Recommendations
    - Schematic For Ford F250 Manual Door Lock User Reviews and Ratings
    - Schematic For Ford F250 Manual Door Lock and Bestseller Lists

5. Accessing Schematic For Ford F250 Manual Door Lock Free and Paid eBooks
    - Schematic For Ford F250 Manual Door Lock Public Domain eBooks
    - Schematic For Ford F250 Manual Door Lock eBook Subscription Services
    - Schematic For Ford F250 Manual Door Lock Budget-Friendly Options
6. Navigating Schematic For Ford F250 Manual Door Lock eBook Formats
    - ePub, PDF, MOBI, and More
    - Schematic For Ford F250 Manual Door Lock Compatibility with Devices
    - Schematic For Ford F250 Manual Door Lock Enhanced eBook Features
7. Enhancing Your Reading Experience
    - Adjustable Fonts and Text Sizes of Schematic For Ford F250 Manual Door Lock
    - Highlighting and Note-Taking Schematic For Ford F250 Manual Door Lock
    - Interactive Elements Schematic For Ford F250 Manual Door Lock
8. Staying Engaged with Schematic For Ford F250 Manual Door Lock
    - Joining Online Reading Communities
    - Participating in Virtual Book Clubs
    - Following Authors and Publishers Schematic For Ford F250 Manual Door Lock
9. Balancing eBooks and Physical Books Schematic For Ford F250 Manual Door Lock
    - Benefits of a Digital Library
    - Creating a Diverse Reading Collection Schematic For Ford F250 Manual Door Lock
10. Overcoming Reading Challenges
    - Dealing with Digital Eye Strain
    - Minimizing Distractions
    - Managing Screen Time
11. Cultivating a Reading Routine Schematic For Ford F250 Manual Door Lock
    - Setting Reading Goals Schematic For Ford F250 Manual Door Lock
    - Carving Out Dedicated Reading Time
12. Sourcing Reliable Information of Schematic For Ford F250 Manual Door Lock
    - Fact-Checking eBook Content of Schematic For Ford F250 Manual Door Lock
    - Distinguishing Credible Sources
13. Promoting Lifelong Learning

    - Utilizing eBooks for Skill Development
    - Exploring Educational eBooks
14. Embracing eBook Trends
    - Integration of Multimedia Elements
    - Interactive and Gamified eBooks

Schematic For Ford F250 Manual Door Lock Introduction

In todays digital age, the availability of Schematic For Ford F250 Manual Door Lock books and manuals for download has revolutionized the way we access information. Gone are the days of physically flipping through pages and carrying heavy textbooks or manuals. With just a few clicks, we can now access a wealth of knowledge from the comfort of our own homes or on the go. This article will explore the advantages of Schematic For Ford F250 Manual Door Lock books and manuals for download, along with some popular platforms that offer these resources. One of the significant advantages of Schematic For Ford F250 Manual Door Lock books and manuals for download is the cost-saving aspect. Traditional books and manuals can be costly, especially if you need to purchase several of them for educational or professional purposes. By accessing Schematic For Ford F250 Manual Door Lock versions, you eliminate the need to spend money on physical copies. This not only saves you money but also reduces the environmental impact associated with book production and transportation. Furthermore, Schematic For Ford F250 Manual Door Lock books and manuals for download are incredibly convenient. With just a computer or smartphone and an internet connection, you can access a vast library of resources on any subject imaginable. Whether youre a student looking for textbooks, a professional seeking industry-specific manuals, or someone interested in self-improvement, these digital resources provide an efficient and accessible means of acquiring knowledge. Moreover, PDF books and manuals offer a range of benefits compared to other digital formats. PDF files are designed to retain their formatting regardless of the device used to open them. This ensures that the content appears exactly as intended by the author, with no loss of formatting or missing graphics. Additionally, PDF files can be easily annotated, bookmarked, and searched for specific terms, making them highly practical for studying or referencing. When it comes to accessing Schematic For Ford F250 Manual Door Lock books and manuals, several platforms offer an extensive collection of resources. One such platform is Project Gutenberg, a nonprofit organization that provides over 60,000 free eBooks. These books are primarily in the public domain, meaning they can be freely distributed and downloaded. Project Gutenberg offers a wide range of classic literature, making it an excellent resource for literature enthusiasts. Another popular platform for Schematic For Ford F250 Manual Door Lock books and manuals is Open Library. Open Library is an initiative of the Internet Archive, a non-profit organization dedicated to digitizing cultural artifacts and making them accessible to the public. Open Library hosts

millions of books, including both public domain works and contemporary titles. It also allows users to borrow digital copies of certain books for a limited period, similar to a library lending system. Additionally, many universities and educational institutions have their own digital libraries that provide free access to PDF books and manuals. These libraries often offer academic texts, research papers, and technical manuals, making them invaluable resources for students and researchers. Some notable examples include MIT OpenCourseWare, which offers free access to course materials from the Massachusetts Institute of Technology, and the Digital Public Library of America, which provides a vast collection of digitized books and historical documents. In conclusion, Schematic For Ford F250 Manual Door Lock books and manuals for download have transformed the way we access information. They provide a cost-effective and convenient means of acquiring knowledge, offering the ability to access a vast library of resources at our fingertips. With platforms like Project Gutenberg, Open Library, and various digital libraries offered by educational institutions, we have access to an ever-expanding collection of books and manuals. Whether for educational, professional, or personal purposes, these digital resources serve as valuable tools for continuous learning and self-improvement. So why not take advantage of the vast world of Schematic For Ford F250 Manual Door Lock books and manuals for download and embark on your journey of knowledge?

FAQs About Schematic For Ford F250 Manual Door Lock Books

What is a Schematic For Ford F250 Manual Door Lock PDF? A PDF (Portable Document Format) is a file format developed by Adobe that preserves the layout and formatting of a document, regardless of the software, hardware, or operating system used to view or print it. **How do I create a Schematic For Ford F250 Manual Door Lock PDF?** There are several ways to create a PDF: Use software like Adobe Acrobat, Microsoft Word, or Google Docs, which often have built-in PDF creation tools. Print to PDF: Many applications and operating systems have a "Print to PDF" option that allows you to save a document as a PDF file instead of printing it on paper. Online converters: There are various online tools that can convert different file types to PDF. **How do I edit a Schematic For Ford F250 Manual Door Lock PDF?** Editing a PDF can be done with software like Adobe Acrobat, which allows direct editing of text, images, and other elements within the PDF. Some free tools, like PDFescape or Smallpdf, also offer basic editing capabilities. **How do I convert a Schematic For Ford F250 Manual Door Lock PDF to another file format?** There are multiple ways to convert a PDF to another format: Use online converters like Smallpdf, Zamzar, or Adobe Acrobats export feature to convert PDFs to formats like Word, Excel, JPEG, etc. Software like Adobe Acrobat, Microsoft Word, or other PDF editors may have options to export or save PDFs in different formats. **How do I password-protect a Schematic For Ford F250 Manual Door Lock PDF?** Most PDF editing software allows you to add password protection. In Adobe Acrobat, for instance, you can go to "File" -> "Properties" ->

"Security" to set a password to restrict access or editing capabilities. Are there any free alternatives to Adobe Acrobat for working with PDFs? Yes, there are many free alternatives for working with PDFs, such as: LibreOffice: Offers PDF editing features. PDFsam: Allows splitting, merging, and editing PDFs. Foxit Reader: Provides basic PDF viewing and editing capabilities. How do I compress a PDF file? You can use online tools like Smallpdf, ILovePDF, or desktop software like Adobe Acrobat to compress PDF files without significant quality loss. Compression reduces the file size, making it easier to share and download. Can I fill out forms in a PDF file? Yes, most PDF viewers/editors like Adobe Acrobat, Preview (on Mac), or various online tools allow you to fill out forms in PDF files by selecting text fields and entering information. Are there any restrictions when working with PDFs? Some PDFs might have restrictions set by their creator, such as password protection, editing restrictions, or print restrictions. Breaking these restrictions might require specific software or tools, which may or may not be legal depending on the circumstances and local laws.

Find Schematic For Ford F250 Manual Door Lock :

realistic fiction books for 3rd graders
reading practice book grade 6
reading forum literature circle chapter book descriptions
realidades chapter 5b
rebel rhymes english edition
realize your goal learn the basics to reach your destination
rebel heart english edition
realidades 3 workbook answers pg 25
realidades chapter 2a test
~~reading the web strategies for internet inquiry elizabeth dobler~~
ready ny math students practice grade 5
ready for ielts workbook
real simple recipe organizer
realidades answer key practice workbook 4a
reasonable doubt boxed set episodes english edition

Schematic For Ford F250 Manual Door Lock :

Practice Workbook 2 - 9780130360021 - Exercise 5 Find step-by-step solutions and answers to Exercise 5 from Realidades 2: Practice Workbook 2 - 9780130360021, as well as thousands of textbooks so you can ... Realidades 2 answers (keep it lowkey) Flashcards Study with Quizlet and memorize flashcards containing terms like http://www.slader.com/textbook/9780130360021-practice-workbook-2/, I need two terms to ... Practice Workbook Answers 224 Capítulo 4B Practice Workbook Answers. © Pearson Education, Inc. All rights reserved. n. Page 9. Realidades]. Capítulo 5A. 5A-1. A. Practice Workbook ... Realidades 2 Teacher's Resource Book workbook ... Realidades 2 Teacher's Resource Book workbook including answer key) Chapters 5-9 (2008 2004) · $75.00 USD · Share this item by email. ANSWER KEY - WORKBOOK 5A. Clyde. Who? His mother. How? She encouraged him to 'keep his eyes open' – to look at different cultures and see things around him. Luciana. Realidades 2 workbook answer key.pdf View Realidades 2 workbook answer key.pdf from LANGUAGE 0720 at El Capitan High. IMG 5111.jpeg - Hor Realidades 2 Practice Workbook SA-2... View IMG_5111.jpeg from SPANISH 250 at Franklin High School. Hor Realidades 2 Practice Workbook SA-2 Nombre Capitulo 5A Fecha i Que ocurrio? Realidades 2 Chapter 5A - World Languages A La Carte Useful Resources to help world language learners and teachers. Realidades 2 Chapter 5A ... Realidades 2 capitulo 5a answers Realidades 2 capitulo 5a answers. Writing, Audio & Video Activity Workbook: Cap. With Expert Solutions for thousands of practice problems, you can take the ... Owner's manual for Chrysler Voyager [2004-2007] 2,8 ... - Laga Owner's manual for Chrysler Voyager [2004-2007] 2,8 CRD (US-L368823) - Car partsUsed parts online. Voyager Executive 2.8 Owners Manual Oct 12, 2011 — Hi, just bought a 2007 Grand Voyager 2.8 Exec. Noticed the squiggly orange lights, the noise from under the car and the smoke it emits once ... Manuals - Chrysler Voyager / Grand ... User's manuals. 178 KB, English, 28. Voyager / Grand Voyager IV, 2001 - 2007, 2001 2007 rg voyager caravan ramvan diesel 2 5 2 8 crdi repair manual.pdf. User's ... Manuals - Chrysler Voyager / Grand Voyager 2021-voyager. User's manuals. 22.3 MB, English, 392. Voyager / Grand Voyager II, 1992, service manual chrysler voyager 1992.rar. Service Manual Chrysler Voyager ... Chrysler Voyager (2003 - 2007) Detailed repair guides and DIY insights for 2003-2007 Chrysler Voyager's maintenance with a Haynes manual. Chrysler 2003-2007 Voyager Workshop Manual Chrysler Voyager 2003-2007 Comprehensive Workshop Manual you can download in PDF now. Over 5300 pages of information. suitable for the home workshop ... Chrysler Voyager Service Manual | PDF | Motor Oil | Screw Chrysler Voyager Service Manual - Free ebook download as PDF File (.pdf), Text File (.txt) or read book online for free. Chrysler International reserves the ... Chrysler Voyager 2001-2007 Workshop Repair Manual ... Chrysler Voyager Workshop Manual is the Official Chrysler Service Repair Information handbook. Contains all operations to repair, service and maintain Chrysler ... Chrysler Caravan, Voyager, Town & Country 2003-2007 Total Car Care is the most complete, step-by-step automotive repair manual you'll ever use. All repair procedures are supported by detailed specifications, ... Dodge Caravan Chrysler Voyager & Town & Country: 2003 ... Dodge

Caravan Chrysler Voyager & Town & Country: 2003 thru 2007 (Haynes Automotive Repair Manuals) by Haynes, John Published by Haynes Manuals, ... Suzuki Intruder VS800 Manuals Manuals and User Guides for Suzuki Intruder VS800. We have 1 Suzuki Intruder VS800 manual available for free PDF download: Service Manual ... Suzuki Intruder VL800 Manuals We have 4 Suzuki Intruder VL800 manuals available for free PDF download: Service Manual, Supplementary Service Manual, Manual, Owner's Manual. Suzuki Intruder ... Suzuki Intruder 800: manuals - Enduro Team Owners/Service manual for Suzuki Intruder 800 (VS, VL, VZ, C50, M50, C800, M800) Free Suzuki Motorcycle Service Manuals for download Suzuki motorcycle workshop service manuals to download for free! Suzuki Intruder VL800 Service Manual - manualzz.com View online (639 pages) or download PDF (50 MB) Suzuki Intruder VL800 Service manual • Intruder VL800 motorcycles PDF manual download and more Suzuki online ... Suzuki VS800 Intruder (U.S.) 1992 Clymer Repair Manuals for the 1992-2004 Suzuki VS800 Intruder (U.S.) are your trusted resource for maintenance and repairs. Clear repair solutions for ... 1995 1996 Suzuki VS800GL Intruder Motorcycle Service ... 1995 1996 Suzuki VS800GL Intruder Motorcycle Service Repair Manual Supplement ; Quantity. 1 available ; Item Number. 374156931186 ; Accurate description. 4.8. Suzuki VL800 2002-2009 Service Manual Free Download | This Free Downloadable Service Manual Includes Everything You would need to Service & Repair your Suzuki VL800 Motorbike. You can download the Individual Pages ... SUZUKI VS800 INTRUDER 800 1992 1993 1994 1995 ... SUZUKI VS800 INTRUDER 800 1992 1993 1994 1995 1996 SERVICE REPAIR SHOP MANUAL ; Quantity. 3 sold. 3 available ; Item Number. 364529641821 ; Year of Publication. DOWNLOAD 1985-2009 Suzuki Service Manual INTRUDER ... Instant Download Service Manual for 1985-2009 Suzuki models, Intruder Volusia Boulevard VS700 VS750 VS800 VS1400 VL1500 Motorcycles, 700 750 800 1400 1500 ...