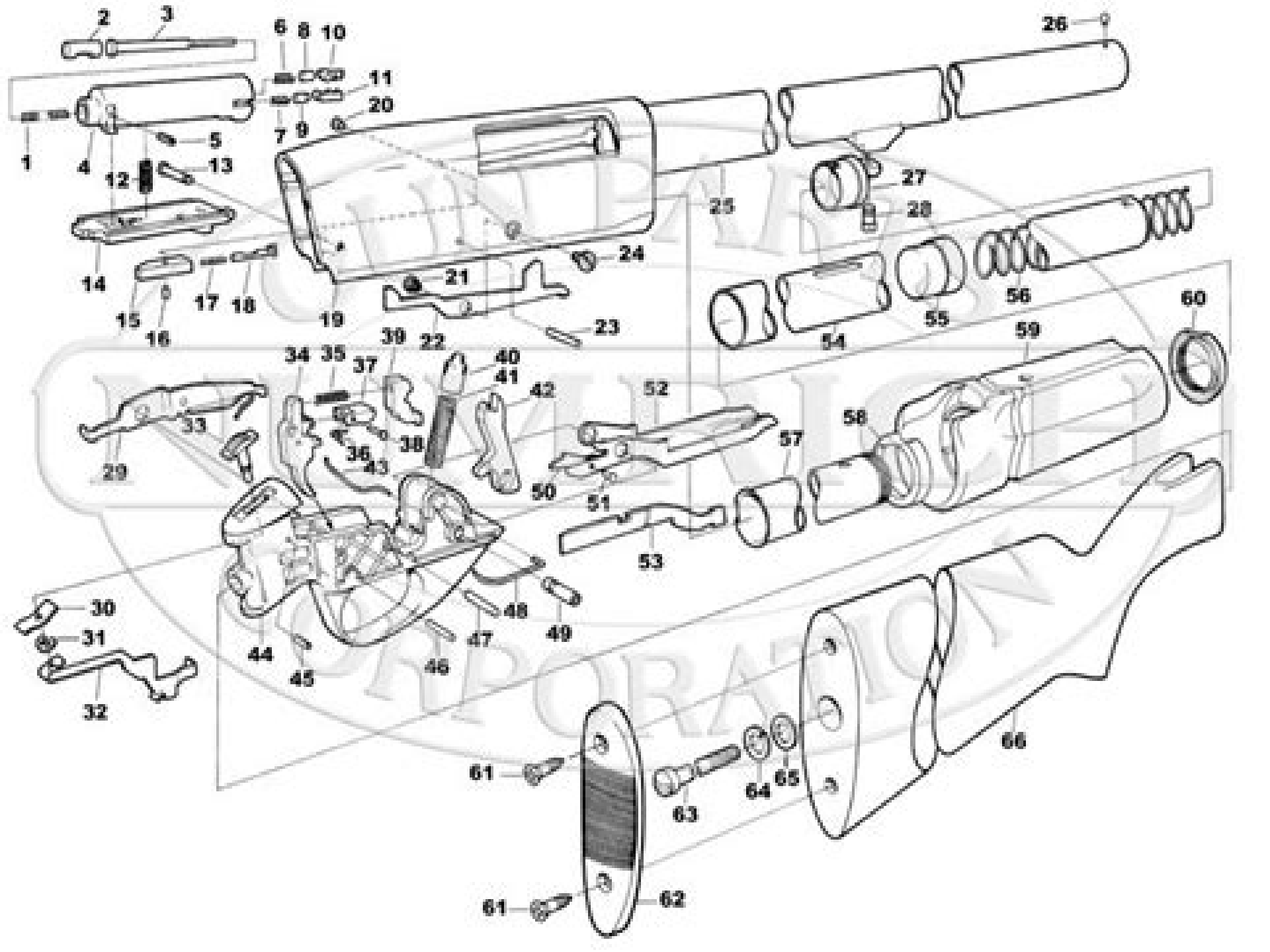
1
2
3
4
5
6
7
8
9
10
11
12
13
14
15
16
17
18
19
20
21
22
23
24
25
26
27
28
29
30
31
32
33
34
35
36
37
38
39
40
41
42
43
44
45
46
47
48
49
50
51
52
53
54
55
56
57
58
59
60
61
62
63
64
65
66

Savage Model 77 User Manual

L Manion

Savage Model 77 User Manual:

Savage Model 77 User Manual: Bestsellers in 2023 The year 2023 has witnessed a noteworthy surge in literary brilliance, with numerous engrossing novels enthralling the hearts of readers worldwide. Lets delve into the realm of bestselling books, exploring the fascinating narratives that have enthralled audiences this year. Savage Model 77 User Manual : Colleen Hoovers "It Ends with Us" This poignant tale of love, loss, and resilience has gripped readers with its raw and emotional exploration of domestic abuse. Hoover expertly weaves a story of hope and healing, reminding us that even in the darkest of times, the human spirit can prevail. Uncover the Best : Taylor Jenkins Reids "The Seven Husbands of Evelyn Hugo" This captivating historical fiction novel unravels the life of Evelyn Hugo, a Hollywood icon who defies expectations and societal norms to pursue her dreams. Reids captivating storytelling and compelling characters transport readers to a bygone era, immersing them in a world of glamour, ambition, and self-discovery. Savage Model 77 User Manual : Delia Owens "Where the Crawdads Sing" This evocative coming-of-age story follows Kya Clark, a young woman who grows up alone in the marshes of North Carolina. Owens spins a tale of resilience, survival, and the transformative power of nature, captivating readers with its evocative prose and mesmerizing setting. These bestselling novels represent just a fraction of the literary treasures that have emerged in 2023. Whether you seek tales of romance, adventure, or personal growth, the world of literature offers an abundance of engaging stories waiting to be discovered. The novel begins with Richard Papen, a bright but troubled young man, arriving at Hampden College. Richard is immediately drawn to the group of students who call themselves the Classics Club. The club is led by Henry Winter, a brilliant and charismatic young man. Henry is obsessed with Greek mythology and philosophy, and he quickly draws Richard into his world. The other members of the Classics Club are equally as fascinating. Bunny Corcoran is a wealthy and spoiled young man who is always looking for a good time. Charles Tavis is a quiet and reserved young man who is deeply in love with Henry. Camilla Macaulay is a beautiful and intelligent young woman who is drawn to the power and danger of the Classics Club. The students are all deeply in love with Morrow, and they are willing to do anything to please him. Morrow is a complex and mysterious figure, and he seems to be manipulating the students for his own purposes. As the students become more involved with Morrow, they begin to commit increasingly dangerous acts. The Secret History is a exceptional and gripping novel that will keep you guessing until the very end. The novel is a cautionary tale about the dangers of obsession and the power of evil.

https://crm.avenza.com/data/scholarship/Documents/Ps_Vita_Games_Ninja_Gaiden.pdf

Table of Contents Savage Model 77 User Manual

1. Understanding the eBook Savage Model 77 User Manual
    - The Rise of Digital Reading Savage Model 77 User Manual
    - Advantages of eBooks Over Traditional Books
2. Identifying Savage Model 77 User Manual
    - Exploring Different Genres
    - Considering Fiction vs. Non-Fiction
    - Determining Your Reading Goals
3. Choosing the Right eBook Platform
    - Popular eBook Platforms
    - Features to Look for in an Savage Model 77 User Manual
    - User-Friendly Interface
4. Exploring eBook Recommendations from Savage Model 77 User Manual
    - Personalized Recommendations
    - Savage Model 77 User Manual User Reviews and Ratings
    - Savage Model 77 User Manual and Bestseller Lists
5. Accessing Savage Model 77 User Manual Free and Paid eBooks
    - Savage Model 77 User Manual Public Domain eBooks
    - Savage Model 77 User Manual eBook Subscription Services
    - Savage Model 77 User Manual Budget-Friendly Options
6. Navigating Savage Model 77 User Manual eBook Formats
    - ePub, PDF, MOBI, and More
    - Savage Model 77 User Manual Compatibility with Devices
    - Savage Model 77 User Manual Enhanced eBook Features
7. Enhancing Your Reading Experience
    - Adjustable Fonts and Text Sizes of Savage Model 77 User Manual
    - Highlighting and Note-Taking Savage Model 77 User Manual
    - Interactive Elements Savage Model 77 User Manual
8. Staying Engaged with Savage Model 77 User Manual

    - Joining Online Reading Communities
    - Participating in Virtual Book Clubs
    - Following Authors and Publishers Savage Model 77 User Manual
9. Balancing eBooks and Physical Books Savage Model 77 User Manual
    - Benefits of a Digital Library
    - Creating a Diverse Reading Collection Savage Model 77 User Manual
10. Overcoming Reading Challenges
    - Dealing with Digital Eye Strain
    - Minimizing Distractions
    - Managing Screen Time
11. Cultivating a Reading Routine Savage Model 77 User Manual
    - Setting Reading Goals Savage Model 77 User Manual
    - Carving Out Dedicated Reading Time
12. Sourcing Reliable Information of Savage Model 77 User Manual
    - Fact-Checking eBook Content of Savage Model 77 User Manual
    - Distinguishing Credible Sources
13. Promoting Lifelong Learning
    - Utilizing eBooks for Skill Development
    - Exploring Educational eBooks
14. Embracing eBook Trends
    - Integration of Multimedia Elements
    - Interactive and Gamified eBooks

Savage Model 77 User Manual Introduction

In the digital age, access to information has become easier than ever before. The ability to download Savage Model 77 User Manual has revolutionized the way we consume written content. Whether you are a student looking for course material, an avid reader searching for your next favorite book, or a professional seeking research papers, the option to download Savage Model 77 User Manual has opened up a world of possibilities. Downloading Savage Model 77 User Manual provides numerous advantages over physical copies of books and documents. Firstly, it is incredibly convenient. Gone are the days of carrying around heavy textbooks or bulky folders filled with papers. With the click of a button, you can gain immediate

access to valuable resources on any device. This convenience allows for efficient studying, researching, and reading on the go. Moreover, the cost-effective nature of downloading Savage Model 77 User Manual has democratized knowledge. Traditional books and academic journals can be expensive, making it difficult for individuals with limited financial resources to access information. By offering free PDF downloads, publishers and authors are enabling a wider audience to benefit from their work. This inclusivity promotes equal opportunities for learning and personal growth. There are numerous websites and platforms where individuals can download Savage Model 77 User Manual. These websites range from academic databases offering research papers and journals to online libraries with an expansive collection of books from various genres. Many authors and publishers also upload their work to specific websites, granting readers access to their content without any charge. These platforms not only provide access to existing literature but also serve as an excellent platform for undiscovered authors to share their work with the world. However, it is essential to be cautious while downloading Savage Model 77 User Manual. Some websites may offer pirated or illegally obtained copies of copyrighted material. Engaging in such activities not only violates copyright laws but also undermines the efforts of authors, publishers, and researchers. To ensure ethical downloading, it is advisable to utilize reputable websites that prioritize the legal distribution of content. When downloading Savage Model 77 User Manual, users should also consider the potential security risks associated with online platforms. Malicious actors may exploit vulnerabilities in unprotected websites to distribute malware or steal personal information. To protect themselves, individuals should ensure their devices have reliable antivirus software installed and validate the legitimacy of the websites they are downloading from. In conclusion, the ability to download Savage Model 77 User Manual has transformed the way we access information. With the convenience, cost-effectiveness, and accessibility it offers, free PDF downloads have become a popular choice for students, researchers, and book lovers worldwide. However, it is crucial to engage in ethical downloading practices and prioritize personal security when utilizing online platforms. By doing so, individuals can make the most of the vast array of free PDF resources available and embark on a journey of continuous learning and intellectual growth.

FAQs About Savage Model 77 User Manual Books

1. Where can I buy Savage Model 77 User Manual books? Bookstores: Physical bookstores like Barnes & Noble, Waterstones, and independent local stores. Online Retailers: Amazon, Book Depository, and various online bookstores offer a wide range of books in physical and digital formats.
2. What are the different book formats available? Hardcover: Sturdy and durable, usually more expensive. Paperback:

Cheaper, lighter, and more portable than hardcovers. E-books: Digital books available for e-readers like Kindle or software like Apple Books, Kindle, and Google Play Books.

3. How do I choose a Savage Model 77 User Manual book to read? Genres: Consider the genre you enjoy (fiction, non-fiction, mystery, sci-fi, etc.). Recommendations: Ask friends, join book clubs, or explore online reviews and recommendations. Author: If you like a particular author, you might enjoy more of their work.
4. How do I take care of Savage Model 77 User Manual books? Storage: Keep them away from direct sunlight and in a dry environment. Handling: Avoid folding pages, use bookmarks, and handle them with clean hands. Cleaning: Gently dust the covers and pages occasionally.
5. Can I borrow books without buying them? Public Libraries: Local libraries offer a wide range of books for borrowing. Book Swaps: Community book exchanges or online platforms where people exchange books.
6. How can I track my reading progress or manage my book collection? Book Tracking Apps: Goodreads, LibraryThing, and Book Catalogue are popular apps for tracking your reading progress and managing book collections. Spreadsheets: You can create your own spreadsheet to track books read, ratings, and other details.
7. What are Savage Model 77 User Manual audiobooks, and where can I find them? Audiobooks: Audio recordings of books, perfect for listening while commuting or multitasking. Platforms: Audible, LibriVox, and Google Play Books offer a wide selection of audiobooks.
8. How do I support authors or the book industry? Buy Books: Purchase books from authors or independent bookstores. Reviews: Leave reviews on platforms like Goodreads or Amazon. Promotion: Share your favorite books on social media or recommend them to friends.
9. Are there book clubs or reading communities I can join? Local Clubs: Check for local book clubs in libraries or community centers. Online Communities: Platforms like Goodreads have virtual book clubs and discussion groups.
10. Can I read Savage Model 77 User Manual books for free? Public Domain Books: Many classic books are available for free as theyre in the public domain. Free E-books: Some websites offer free e-books legally, like Project Gutenberg or Open Library.

Find Savage Model 77 User Manual :

ps vita games ninja gaiden
ps tv vertical stand
prospector daffodils university

prune et seacuteraphin font la paix
~~ps3 cech 4003c service manual~~
proton wira manual
psc model english question paper bd
prospectus of ump
ps3 slim quick start guide
~~psychology 6th edition bernstein~~
psychogeacuteneacutealogie partie casser la chaicircne de transmission des sentiments neacutegatifs
ps3 yellow light of death repair guide
ps tv black friday
proverbs for ielts essays
protecting his pride supernatural mates book english edition

Savage Model 77 User Manual :

YW50AP Service Manual It is not possible to include all the knowledge of a mechanic in one manual. Therefore, anyone who uses this book to perform maintenance and repairs on Yamaha. Yamaha Zuma Scooter Repair and Maintenance Manual yamaha zuma scooter repair and maintenance manual - Free ebook download as PDF File (.pdf), Text File (.txt) or read book online for free. zuma repair manual. Access to a Yamaha Zuma/BWS Maintenance Manual May 31, 2021 — They've also got some various Service Manuals for Zuma 50's here. Scooter Service And Repair Manuals I hope that these will be of help to ... MOTORCYCLE SERVICE MANUAL Model - Absolutely Scooters This manual was written by the MBK INDUSTRIE primarily for use by YAMAHA dealers and their qualified mechanics. It is not possible to put an entire ... YAMAHA YW50AP SERVICE MANUAL Pdf Download View and Download Yamaha YW50AP service manual online. YW50AP scooter pdf manual download. 2012-2019 Yamaha YW50F Zuma Scooter Service Manual This Official 2012-2019 Yamaha YW50F Zuma Scooter Factory Service Manual provides detailed service information, step-by-step repair instruction and. Yamaha BWS Zuma 50 YW50F 2019 service manual Hi,. Is anyone having the Yamaha BWS Zuma 50cc YW50F 2019 service manual that can send me the pdf Can't find it and Yamahapub won't let me ... YAMAHA 2012-2019 ZUMA 50 (BWs 50) 50F 50 FX Scooter ... Aug 22, 2017 — Collections of YAMAHA bikes workshop service manuals, repair manual, spare parts catalogs and owner's manuals. YAMAHA Owner's Manual Library Yamaha Owner's Manual Library is a free service provided by Yamaha Motors allowing you to view your Owner's Manual anytime, anywhere. Now, let's search! How to get a FREE Service Manual for your Yamaha dirt bike Starbucks Complete Training Manual | PDF | Coffee | Tea Starbucks Complete Training Manual - Free download as

PDF File (.pdf), Text File (.txt) or read online for free. Starbucks Complete Training Manual. Updated Training Infographics! : r/starbucks my training was basically 12 hours of quick run-throughs of so many details. ... Simple ASA wallet approval guide pdf. 19 upvotes · 2 comments. r ... Starbucks employee training manual Starbucks employee schedule. There is always more to learn about the vast and wonderful world of coffee. The Starbucks Coffee Academy is designed to explore the ... Barista+orig+manual+sml.pdf Quick Guide To Starbucks Specialty Beverages." This brochure shows an ... Do NOT remove the screws from the bottom of your Starbucks Barista-. Rapporto- Filter. Starbucks Beverage Manual Study Flashcards Study with Quizlet and memorize flashcards containing terms like Espresso Recipe Basics* *Applies to the majority of hot espresso beverages, ... Create a group of three to five people. This guidebook will ... Around Starbucks coffee, and the theater and romance— but do it our way. First, by building a company that would achieve the balance between profit and social. Woman Prints Starbucks Training Guide to Make Drinks at ... Aug 7, 2023 — ... training manual to better represent the Starbucks drink making process. ... The primary guide appears to be a creation from a former Starbucks ... Starbucks Partner Manual Starbucks Partner Manual. Author / Uploaded; John Smith. Categories; Starbucks · Coffee · Drink · Beverages · Foods. Starbucks Barista Employee Playbook Guide ... The Ultimate Starbucks Barista Guide - Tips for... Sep 20, 2017 — The Ultimate Starbucks Barista Guide - Tips for your Starbucks training ... starbucks espresso recipe with instructions on how to make it in the ... Answer to Cornerstones of Managerial Accounting 5t Answer Key to Mowen, Cornerstone Manegerial Accounting full file at basic managerial accounting concepts discussion questions cost is the amount of cash or. Cornerstones Of Managerial Accounting (... 5th Edition ... Get your students where they need to be with CORNERSTONES OF MANAGERIAL ACCOUNTING. Cornerstones delivers a truly unique learning system that is integrated ... Cornerstones Of Managerial Accounting Solution Manual 1168 solutions available. Textbook Solutions for Cornerstones of Managerial Accounting. by. 5th Edition. Author: Dan L Heitger, Maryanne M Mowen. 1078 solutions ... Cornerstones of Managerial Accounting 5th Edition Mowen ... Cornerstones of Managerial Accounting 5th Edition Mowen Solutions Manual | PDF | Cost | Cost Of Goods Sold. Cornerstones of Managerial Accounting - 5th Edition Find step-by-step solutions and answers to Cornerstones of Managerial Accounting - 9781133943983, as well as thousands of textbooks so you can move forward ... Solution Manual Cornerstones of Managerial Accounting ... 1. Introduction to Managerial Accounting. 2. Basic Managerial Accounting Concepts. 3. Cost Behavior. 4. Cost-Volume-Profit Analysis: A ... Textbook Solutions Manual for Cornerstones of Managerial ... Test Bank for Cornerstones of Managerial Accounting 5th ... View Test prep - Test Bank for Cornerstones of Managerial Accounting 5th Edition Mowen, Hansen, Heitger.doc from APC 27 at University of California, Davis. Solutions Manual for Managerial Accounting 5th Edition by ... Aug 4, 2018 — Solutions Manual for Managerial Accounting 5th Edition by Wild - Download as a PDF or view online for free. Cornerstones of Managerial Accounting ... Publisher, Cengage Learning; 5th edition (January 1, 2013) ; Hardcover, 800 pages ; Item Weight, 4.05 pounds ; Dimensions, 9 x 1.25 x 10.75 inches.