Vehicle Identification Number (VIN) Location

The machine model number and serial number are important for vehicle identification. The vehicle identification number (A) is stamped on the lower LH frame rail close to the front wheel. The model and serial numbers are also located on a sticker under the hood (B).

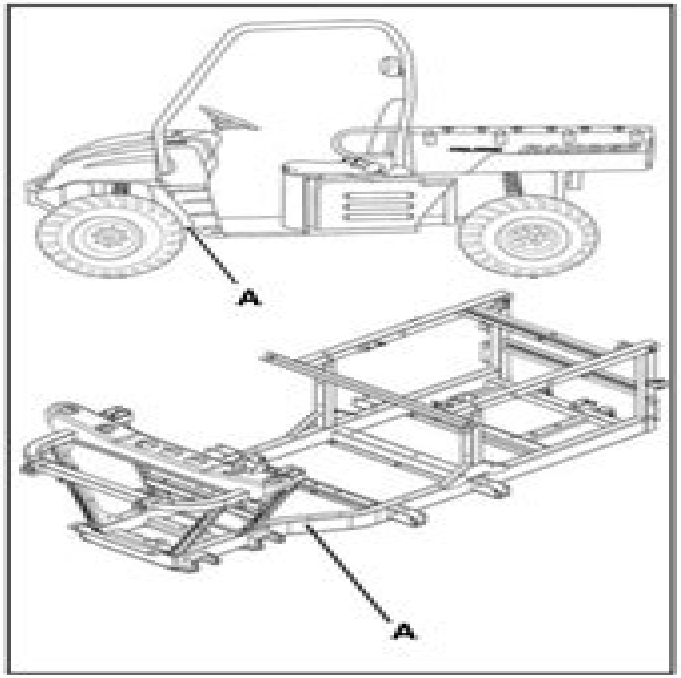

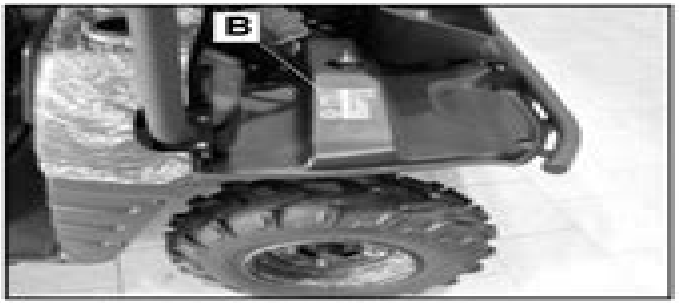

Transmission I.D. Number Location

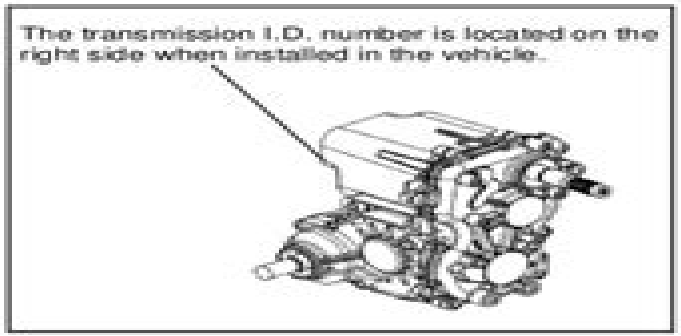

Polaris Ranger 2x4 2009 Workshop Manual

Ford Motor Company. Technical Support Operations

Polaris Ranger 2x4 2009 Workshop Manual:

Clymer Polaris Ranger 800, 2010-2014 Haynes Publishing,2017-10-25 The Clymer Polaris Ranger 800 2010 2014 Repair Manual features complete maintenance and repair information for the Polaris RZR 800 built during model years 2008 2014 More than 700 Photos guide the reader through every job Where possible tools developed by the writers during the disassembly and reassembly of the machine are described in the text to save the reader from spending hundreds of dollars on factory tools Each manual features quick reference data plus chapters on Troubleshooting Lubrication maintenance and tune up Engine top end Engine lower end Clutch and drivebelt system Transmission Engine management system Electrical system Cooling system Wheels hubs and tires Front suspension steering and front gearcase Rear suspension and rear gearcase Brakes Body Wiring diagrams **Ford Ranger and Bronco II** Homer Eubanks,John Harold Haynes,1987 Step by step procedures linked to hundreds of easy to follow photos to assist owners in maintaining or repairing Ford Ranger pick ups and Bronco II s 2983 1986 **Ford Ranger Pick-ups 1993 thru 2011** Editors of Haynes Manuals,2013-06-15 With a Haynes manual you can do it yourself from simple maintenance to basic repairs Haynes writes every book based on a complete teardown of the vehicle We learn the best ways to do a job and that makes it quicker easier and cheaper for you Our books have clear instructions and hundreds of photographs that show each step Whether you re a beginner or a pro you can save big with Haynes Step by step procedures Easy to follow photos Complete troubleshooting section Valuable short cuts Color spark plug diagnosis Complete coverage for your Ford Ranger Mazda Pick up covering all Ford Ranger models for 1993 thru 2011 Mazda B2300 B2500 B3000 B4000 for 1994 thru 2008 Routine Maintenance Tune up procedures Engine repair Cooling and heating Air Conditioning Fuel and exhaust Emissions control Ignition Brakes Suspension and steering Electrical systems Wiring diagrams **Polaris ATV Owners Workshop Manual** Alan Ahlstrand,John Harold Haynes,2004 The purpose of this manual is to help you get the best value from your ATV It can help you decide what work must be done even if you choose to have it done by a dealer service department or a repair shop it provides information and procedures for routine maintenance and servicing and it offers diagnostic and repair procedures to follow when trouble occurs This book should allow you to tackle any job yourself nbs **Chilton's Ford Ranger Pick-ups 2000-05 Repair Manual** Eric Jorgensen,Alan Ahlstrand,2007-03-02 Covers U S and Canadian models of Ford Ranger and Mazda B2300 B2500 B3000 B4000 pick ups

2000 Ranger Workshop Manual Ford Motor Company. Technical Support Operations,1999 *Chilton's Ford Ranger Pick-ups* Eric Jorgensen,Alan Ahlstrand,2011 Covers U S and Canadian models of Ford Ranger 2000 thru 2010 and Mazda B2300 B2500 B3000 and B4000 pick ups 2000 thru 2009 **Ford Ranger workshop manual, 1998** Ford Motor Company,1998 2006-75 PJ Ranger Workshop Manual Ford Motor Company,2006-11-01 *FORD RANGER* HAYNES MANUALS.,2018 2006-75 PJ Ranger Workshop Manual Ford Motor Company,2006-11-01 **93 - 97 Ford Ranger Repair Manual** , This is the PDF service repair manual for the Ford Ranger 1993 1997 The same manual autoshops and

dealers reference to This isnt your everyday off the shelf autostore manual This manual is guranteed to be better than any autostore manual Detailed drawings Detail diagrams Detail step by step instructions Covers more than standard manuals Available as PDF no more damage manuals Chapters include Body Frame and Mounting Engine Suspension Driveline Brakes Transmission Clutch Exhaust system Fuel system Steering Climate Control system Instrumentation and Warning systems Battery and charging system Audio system Lighting Electrical Power supply *Chilton's Ford Ranger Pick-Ups 2000-11 Repair Manual* Eric Jorgensen,Alan Ahlstrand,2013 Covers U S and Canadian models of Ford Ranger 2000 through 2011 and Mazda B2300 B2500 B3000 and B4000 pick ups 2000 throgh 2009 Cover **2006-75 PJ Ranger Workshop Manual Set** Ford Motor Company,2006-11-01 *Ford Ranger & Bronco II* Homer Eubanks,John Harold Haynes,1989 Models covered Ranger pick ups and Bronco II s 1983 thru 1989 Ranger 2001 Workshop Manual Ford Motor Company. Technical Support Operations,2000 *1999 Ranger Workshop Manual* Ford Motor Company. Technical Support Operations,1999 Ranger 1998 Workshop Manual ,1997 2006-75 PJ Ranger Workshop Manual Ford Motor Company,2006-11-01 *Ford Ranger Pick-ups* Eric Jorgensen,Alan Ahlstrand,John Harold Haynes,2008 Haynes offers the best coverage for cars trucks vans SUVs and motorcycles on the market today Each manual contains easy to follow step by step instructions linked to hundreds of photographs and illustrations Included in every manual troubleshooting section to help identify specific problems tips that give valuable short cuts to make the job easier and eliminate the need for special tools notes cautions and warnings for the home mechanic color spark plug diagnosis and an easy to use index

Right here, we have countless book **Polaris Ranger 2x4 2009 Workshop Manual** and collections to check out. We additionally offer variant types and also type of the books to browse. The pleasing book, fiction, history, novel, scientific research, as capably as various other sorts of books are readily easy to get to here.

As this Polaris Ranger 2x4 2009 Workshop Manual, it ends stirring beast one of the favored book Polaris Ranger 2x4 2009 Workshop Manual collections that we have. This is why you remain in the best website to see the unbelievable books to have.

https://crm.avenza.com/files/uploaded-files/Download_PDFS/running%20water%20and%20groundwater%20answers.pdf

Table of Contents Polaris Ranger 2x4 2009 Workshop Manual

1. Understanding the eBook Polaris Ranger 2x4 2009 Workshop Manual
    - The Rise of Digital Reading Polaris Ranger 2x4 2009 Workshop Manual
    - Advantages of eBooks Over Traditional Books
2. Identifying Polaris Ranger 2x4 2009 Workshop Manual
    - Exploring Different Genres
    - Considering Fiction vs. Non-Fiction
    - Determining Your Reading Goals
3. Choosing the Right eBook Platform
    - Popular eBook Platforms
    - Features to Look for in an Polaris Ranger 2x4 2009 Workshop Manual
    - User-Friendly Interface
4. Exploring eBook Recommendations from Polaris Ranger 2x4 2009 Workshop Manual
    - Personalized Recommendations
    - Polaris Ranger 2x4 2009 Workshop Manual User Reviews and Ratings
    - Polaris Ranger 2x4 2009 Workshop Manual and Bestseller Lists
5. Accessing Polaris Ranger 2x4 2009 Workshop Manual Free and Paid eBooks
    - Polaris Ranger 2x4 2009 Workshop Manual Public Domain eBooks

    - Polaris Ranger 2x4 2009 Workshop Manual eBook Subscription Services
    - Polaris Ranger 2x4 2009 Workshop Manual Budget-Friendly Options
6. Navigating Polaris Ranger 2x4 2009 Workshop Manual eBook Formats
    - ePub, PDF, MOBI, and More
    - Polaris Ranger 2x4 2009 Workshop Manual Compatibility with Devices
    - Polaris Ranger 2x4 2009 Workshop Manual Enhanced eBook Features
7. Enhancing Your Reading Experience
    - Adjustable Fonts and Text Sizes of Polaris Ranger 2x4 2009 Workshop Manual
    - Highlighting and Note-Taking Polaris Ranger 2x4 2009 Workshop Manual
    - Interactive Elements Polaris Ranger 2x4 2009 Workshop Manual
8. Staying Engaged with Polaris Ranger 2x4 2009 Workshop Manual
    - Joining Online Reading Communities
    - Participating in Virtual Book Clubs
    - Following Authors and Publishers Polaris Ranger 2x4 2009 Workshop Manual
9. Balancing eBooks and Physical Books Polaris Ranger 2x4 2009 Workshop Manual
    - Benefits of a Digital Library
    - Creating a Diverse Reading Collection Polaris Ranger 2x4 2009 Workshop Manual
10. Overcoming Reading Challenges
    - Dealing with Digital Eye Strain
    - Minimizing Distractions
    - Managing Screen Time
11. Cultivating a Reading Routine Polaris Ranger 2x4 2009 Workshop Manual
    - Setting Reading Goals Polaris Ranger 2x4 2009 Workshop Manual
    - Carving Out Dedicated Reading Time
12. Sourcing Reliable Information of Polaris Ranger 2x4 2009 Workshop Manual
    - Fact-Checking eBook Content of Polaris Ranger 2x4 2009 Workshop Manual
    - Distinguishing Credible Sources
13. Promoting Lifelong Learning
    - Utilizing eBooks for Skill Development
    - Exploring Educational eBooks

14. Embracing eBook Trends
    - Integration of Multimedia Elements
    - Interactive and Gamified eBooks

Polaris Ranger 2x4 2009 Workshop Manual Introduction

In todays digital age, the availability of Polaris Ranger 2x4 2009 Workshop Manual books and manuals for download has revolutionized the way we access information. Gone are the days of physically flipping through pages and carrying heavy textbooks or manuals. With just a few clicks, we can now access a wealth of knowledge from the comfort of our own homes or on the go. This article will explore the advantages of Polaris Ranger 2x4 2009 Workshop Manual books and manuals for download, along with some popular platforms that offer these resources. One of the significant advantages of Polaris Ranger 2x4 2009 Workshop Manual books and manuals for download is the cost-saving aspect. Traditional books and manuals can be costly, especially if you need to purchase several of them for educational or professional purposes. By accessing Polaris Ranger 2x4 2009 Workshop Manual versions, you eliminate the need to spend money on physical copies. This not only saves you money but also reduces the environmental impact associated with book production and transportation. Furthermore, Polaris Ranger 2x4 2009 Workshop Manual books and manuals for download are incredibly convenient. With just a computer or smartphone and an internet connection, you can access a vast library of resources on any subject imaginable. Whether youre a student looking for textbooks, a professional seeking industry-specific manuals, or someone interested in self-improvement, these digital resources provide an efficient and accessible means of acquiring knowledge. Moreover, PDF books and manuals offer a range of benefits compared to other digital formats. PDF files are designed to retain their formatting regardless of the device used to open them. This ensures that the content appears exactly as intended by the author, with no loss of formatting or missing graphics. Additionally, PDF files can be easily annotated, bookmarked, and searched for specific terms, making them highly practical for studying or referencing. When it comes to accessing Polaris Ranger 2x4 2009 Workshop Manual books and manuals, several platforms offer an extensive collection of resources. One such platform is Project Gutenberg, a nonprofit organization that provides over 60,000 free eBooks. These books are primarily in the public domain, meaning they can be freely distributed and downloaded. Project Gutenberg offers a wide range of classic literature, making it an excellent resource for literature enthusiasts. Another popular platform for Polaris Ranger 2x4 2009 Workshop Manual books and manuals is Open Library. Open Library is an initiative of the Internet Archive, a non-profit organization dedicated to digitizing cultural artifacts and making them accessible to the public. Open Library hosts millions of books, including both public domain works and contemporary titles. It also allows users to borrow digital copies of certain books for a limited period, similar to a library lending system. Additionally, many universities and

educational institutions have their own digital libraries that provide free access to PDF books and manuals. These libraries often offer academic texts, research papers, and technical manuals, making them invaluable resources for students and researchers. Some notable examples include MIT OpenCourseWare, which offers free access to course materials from the Massachusetts Institute of Technology, and the Digital Public Library of America, which provides a vast collection of digitized books and historical documents. In conclusion, Polaris Ranger 2x4 2009 Workshop Manual books and manuals for download have transformed the way we access information. They provide a cost-effective and convenient means of acquiring knowledge, offering the ability to access a vast library of resources at our fingertips. With platforms like Project Gutenberg, Open Library, and various digital libraries offered by educational institutions, we have access to an ever-expanding collection of books and manuals. Whether for educational, professional, or personal purposes, these digital resources serve as valuable tools for continuous learning and self-improvement. So why not take advantage of the vast world of Polaris Ranger 2x4 2009 Workshop Manual books and manuals for download and embark on your journey of knowledge?

FAQs About Polaris Ranger 2x4 2009 Workshop Manual Books

1. Where can I buy Polaris Ranger 2x4 2009 Workshop Manual books? Bookstores: Physical bookstores like Barnes & Noble, Waterstones, and independent local stores. Online Retailers: Amazon, Book Depository, and various online bookstores offer a wide range of books in physical and digital formats.
2. What are the different book formats available? Hardcover: Sturdy and durable, usually more expensive. Paperback: Cheaper, lighter, and more portable than hardcovers. E-books: Digital books available for e-readers like Kindle or software like Apple Books, Kindle, and Google Play Books.
3. How do I choose a Polaris Ranger 2x4 2009 Workshop Manual book to read? Genres: Consider the genre you enjoy (fiction, non-fiction, mystery, sci-fi, etc.). Recommendations: Ask friends, join book clubs, or explore online reviews and recommendations. Author: If you like a particular author, you might enjoy more of their work.
4. How do I take care of Polaris Ranger 2x4 2009 Workshop Manual books? Storage: Keep them away from direct sunlight and in a dry environment. Handling: Avoid folding pages, use bookmarks, and handle them with clean hands. Cleaning: Gently dust the covers and pages occasionally.
5. Can I borrow books without buying them? Public Libraries: Local libraries offer a wide range of books for borrowing. Book Swaps: Community book exchanges or online platforms where people exchange books.
6. How can I track my reading progress or manage my book collection? Book Tracking Apps: Goodreads, LibraryThing,

and Book Catalogue are popular apps for tracking your reading progress and managing book collections. Spreadsheets: You can create your own spreadsheet to track books read, ratings, and other details.

7. What are Polaris Ranger 2x4 2009 Workshop Manual audiobooks, and where can I find them? Audiobooks: Audio recordings of books, perfect for listening while commuting or multitasking. Platforms: Audible, LibriVox, and Google Play Books offer a wide selection of audiobooks.
8. How do I support authors or the book industry? Buy Books: Purchase books from authors or independent bookstores. Reviews: Leave reviews on platforms like Goodreads or Amazon. Promotion: Share your favorite books on social media or recommend them to friends.
9. Are there book clubs or reading communities I can join? Local Clubs: Check for local book clubs in libraries or community centers. Online Communities: Platforms like Goodreads have virtual book clubs and discussion groups.
10. Can I read Polaris Ranger 2x4 2009 Workshop Manual books for free? Public Domain Books: Many classic books are available for free as theyre in the public domain. Free E-books: Some websites offer free e-books legally, like Project Gutenberg or Open Library.

Find Polaris Ranger 2x4 2009 Workshop Manual :

running water and groundwater answers
~~running dog english edition~~
rx v740 yamaha manual
~~russian face to face workbook~~
rubric persuasive letter for elementary students
rv floor repair replace
rubric for 3rd grade speculative writing
ruger p94 owners manual
runescape guide to one defence pures
ruger gp 100 manual
royal vf1000 manual
rta handbook full licence
rv generator troubleshooting guide flight systems inc
rye bread recipe for breadmaker

rs agrawal class 10th solve answer

Polaris Ranger 2x4 2009 Workshop Manual :

Product Manuals Need the manual for your Masterbuilt® product? We've got you covered. Search by model number to find the manual you need. Product Manuals Need the manual for your Masterbuilt product? We've got you covered. Search by model number to find the manual you need. 20070910 Manual.qxd Do not store electric smoker with HOT ashes inside unit. Store only when all surfaces are cold. • Accessory attachments not supplied by Masterbuilt ... Masterbuilt instructions Jul 21, 2017 — 1. Make sure water pan is in place with NO WATER. 2. Set temperature to 275°F (135°C) and run unit for 3 hours. ... As I read it, it does seem to ... Free Masterbuilt Smoker User Manuals | ManualsOnline.com Cooking manuals and free pdf instructions. Find the outdoor cooking product manual you need at ManualsOnline. assembly, care & use manual warning & safety information Always use electric smoker in accordance with all applicable local, state and federal fire codes. ... Refer to page 13 instructions. Contact Masterbuilt at 1.800 ... Masterbuilt Electric Smoker Manual: User Guide & ... Mar 26, 2021 — This user manual for the Masterbuilt 30" Digital Electric Smoker contains important safety information and instructions on proper assembly ... S XL Gas Smoker Manual This manual contains important information necessary for the proper assembly and safe use of the appliance. Read and follow all warnings and instructions before ... rev 6-27 7 in 1 Smoker Manual.qxd SMOKER IS READY FOR USE. MASTERBUILT RECOMMENDS SEASONING SMOKER BEFORE USE. SEE “HOW TO SEASON AND USE SMOKER” SECTION IN THIS MANUAL. E. G. F. J. 10. 11. 9. 9. Cognition - Matlin, Margaret W.: Books Book details · ISBN-10. 1118148967 · ISBN-13. 978-1118148969 · Edition. 8th · Publisher. Wiley · Publication date. November 5, 2012 · Language. English · Dimensions. Cognitive Psychology: 9781118318690: Matlin, Margaret W. The 8th edition continues to relate cognitive topics to applications in everyday life. This edition is fully updated with research and additional anecdotes. Cognition 8th edition 9781118148969 1118148967 Rent Cognition 8th edition (978-1118148969) today, or search our site for other textbooks by Margaret W. Matlin. Every textbook comes with a 21-day "Any ... Margaret W. Matlin | Get Textbooks Books by Margaret Matlin ; Learning & Behavior(9th Edition) Eighth Edition ; Cognition(10th Edition) ; Cognitive Psychology, Eighth Edition International Student ... Cognition, 8th Edition - Margaret W. Matlin Nov 6, 2012 — Margaret Matlin s Cognition demonstrates how cognitive processes are relevant to everyday, real-world experiences, and frequently examines ... Cognition - Matlin, Margaret W.: 9781118148969 The 8th edition continues to relate cognitive topics to applications in everyday life. This edition is fully updated with research and additional anecdotes. Cognition 8th edition Margaret W. Matlin Used Like New Cognition 8th edition Margaret W. Matlin Used Like New. Condition is "Like New". Shipped with USPS Retail Ground. Margaret W Matlin > Compare Discount Book Prices & ... The 9th edition continues to relate cognitive topics to applications in everyday life. This e ..." Cognition(8th Edition) by Margaret W. Matlin Hardcover ...

Cognition | Rent | 9781118476925 COUPON: RENT Cognition 8th edition by Matlin eBook (9781118476925) and save up to 80% on online textbooks at Chegg.com now! International Management: Text and Cases by Beamish This book, looking at how firms become and remain international in scope, has been used in hundreds of universities and colleges in over twenty countries. International Management: Text and Cases (McGraw-Hill ... International Management: Text and Cases (McGraw-Hill Advanced Topics in Global Management) by Paul W. Beamish; Andrew Inkpen; Allen Morrison - ISBN 10: ... International Management: Text and Cases - Amazon.com International Management · Text and Cases ; Buy Used · Very Good ; 978-0256193497. See all details ; Important information. To report an issue with this product, ... International Management: Text and Cases Beamish, Morrison, Rosenweig and Inkpen's, International Management, 5e is an international, international-management book. It looks at how firms become ... International Management: Text and Cases Beamish, Morrison, Rosenzweig and Inkpen , four highly-experienced international business teachers/researchers, offer an integrated text and casebook which has ... International Management: Text and Cases International Management: Text and Cases. Authors, Paul W. Beamish, Allen J. Morrison, Philip M. Rosenzweig. Edition, 3. Publisher, Irwin, 1997. Original from ... International Management Beamish Text International Management Beamish Text. 1. International Management Beamish. Text. Policies and Practices for Multinational Enterprises. International Business ... International Management by Paul W. Beamish Sep 1, 1990 — It is about the experiences of firms of all sizes,from any countries,as they come to grips with an increasingly competitive global environment. International Management: Text and Cases International Management: Text and Cases ... An exploration of the experiences of firms of all sizes, from many countries and regions, as they come to grips with ... International Management: Text and Cases by Beamish Apr 1, 2003 — International Management: Text and Cases. Beamish, Paul Beamish, Andrew Inkpen ... Focusing on issues of international management common and ...