(3) Diagram

The detection current for switchable type should also be converted for 277 / 480 V or 139 / 240 V, 120 / 208 V, 120 / 240 V depending on voltage requirements.

As shown in the figure, change the voltage selector switch, for either ———— or ———— line connection.

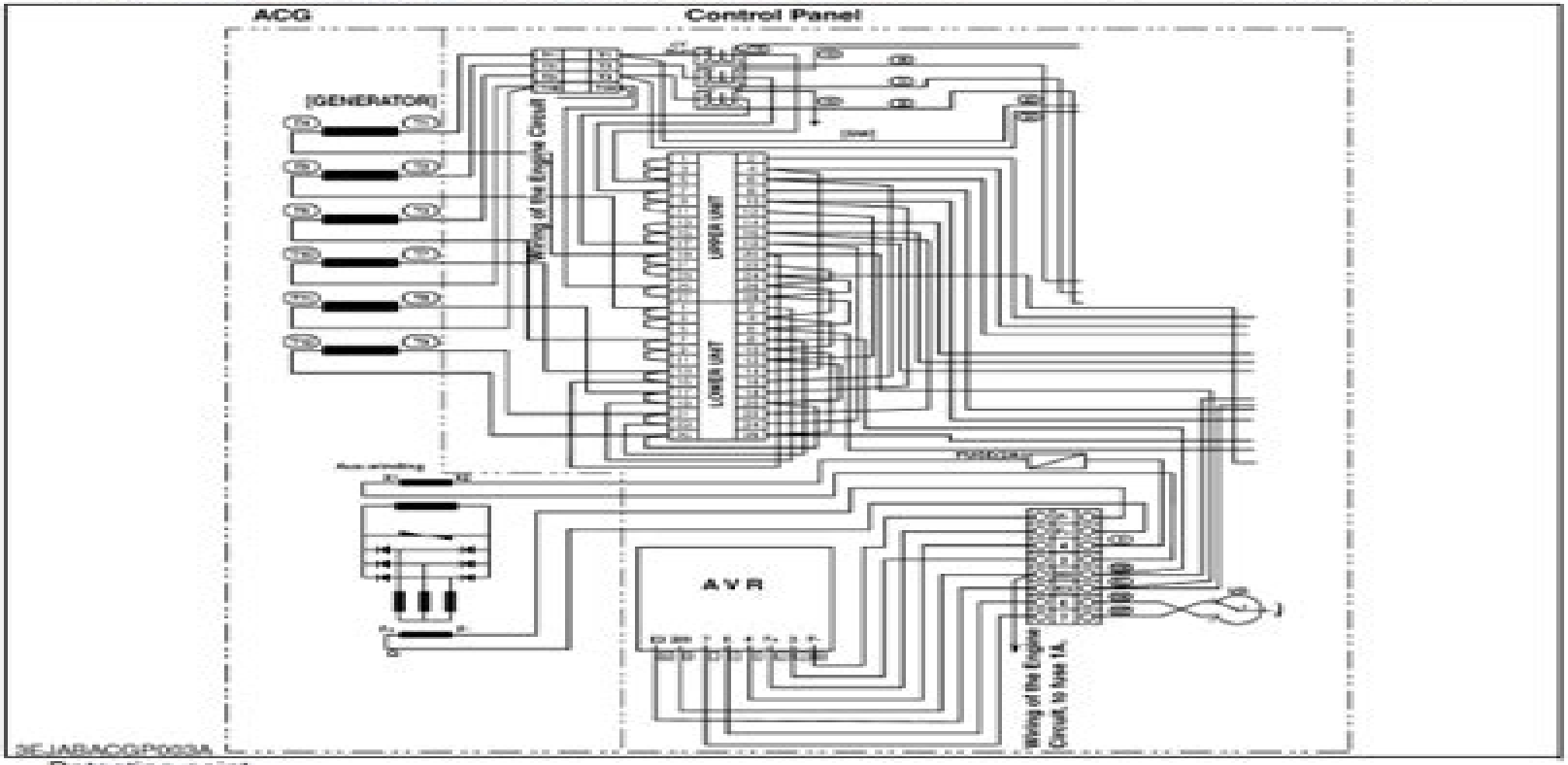

Detecting point

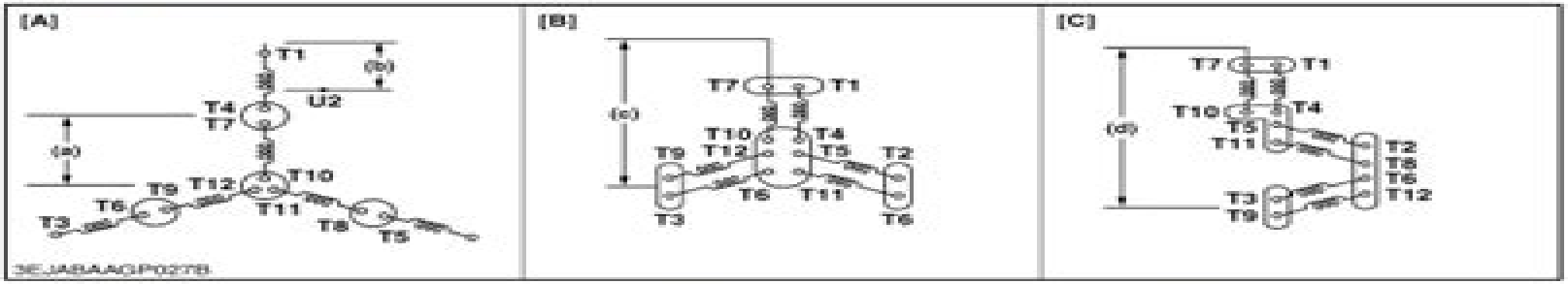

[A] 277 / 480 V
T4-T6
(a) 240 V
(b) ≈120 V

[B] 139 / 240 V (120 / 208 V)
T1-T3
(c) 240 V

[C] 120 / 240 V
T1-T3
(d) 240 V

www.epcatalogs.com

Perkins Generator Repair Manual 60 Hz

Ian Pickup

Perkins Generator Repair Manual 60 Hz:

Reviewing **Perkins Generator Repair Manual 60 Hz**: Unlocking the Spellbinding Force of Linguistics

In a fast-paced world fueled by information and interconnectivity, the spellbinding force of linguistics has acquired newfound prominence. Its capacity to evoke emotions, stimulate contemplation, and stimulate metamorphosis is truly astonishing. Within the pages of "**Perkins Generator Repair Manual 60 Hz**," an enthralling opus penned by a highly acclaimed wordsmith, readers embark on an immersive expedition to unravel the intricate significance of language and its indelible imprint on our lives. Throughout this assessment, we shall delve to the book is central motifs, appraise its distinctive narrative style, and gauge its overarching influence on the minds of its readers.

https://crm.avenza.com/results/uploaded-files/Documents/Science_Spectrum_20crossword.pdf

Table of Contents Perkins Generator Repair Manual 60 Hz

1. Understanding the eBook Perkins Generator Repair Manual 60 Hz
    - The Rise of Digital Reading Perkins Generator Repair Manual 60 Hz
    - Advantages of eBooks Over Traditional Books
2. Identifying Perkins Generator Repair Manual 60 Hz
    - Exploring Different Genres
    - Considering Fiction vs. Non-Fiction
    - Determining Your Reading Goals
3. Choosing the Right eBook Platform
    - Popular eBook Platforms
    - Features to Look for in an Perkins Generator Repair Manual 60 Hz
    - User-Friendly Interface
4. Exploring eBook Recommendations from Perkins Generator Repair Manual 60 Hz
    - Personalized Recommendations
    - Perkins Generator Repair Manual 60 Hz User Reviews and Ratings
    - Perkins Generator Repair Manual 60 Hz and Bestseller Lists

5. Accessing Perkins Generator Repair Manual 60 Hz Free and Paid eBooks
    - Perkins Generator Repair Manual 60 Hz Public Domain eBooks
    - Perkins Generator Repair Manual 60 Hz eBook Subscription Services
    - Perkins Generator Repair Manual 60 Hz Budget-Friendly Options
6. Navigating Perkins Generator Repair Manual 60 Hz eBook Formats
    - ePub, PDF, MOBI, and More
    - Perkins Generator Repair Manual 60 Hz Compatibility with Devices
    - Perkins Generator Repair Manual 60 Hz Enhanced eBook Features
7. Enhancing Your Reading Experience
    - Adjustable Fonts and Text Sizes of Perkins Generator Repair Manual 60 Hz
    - Highlighting and Note-Taking Perkins Generator Repair Manual 60 Hz
    - Interactive Elements Perkins Generator Repair Manual 60 Hz
8. Staying Engaged with Perkins Generator Repair Manual 60 Hz
    - Joining Online Reading Communities
    - Participating in Virtual Book Clubs
    - Following Authors and Publishers Perkins Generator Repair Manual 60 Hz
9. Balancing eBooks and Physical Books Perkins Generator Repair Manual 60 Hz
    - Benefits of a Digital Library
    - Creating a Diverse Reading Collection Perkins Generator Repair Manual 60 Hz
10. Overcoming Reading Challenges
    - Dealing with Digital Eye Strain
    - Minimizing Distractions
    - Managing Screen Time
11. Cultivating a Reading Routine Perkins Generator Repair Manual 60 Hz
    - Setting Reading Goals Perkins Generator Repair Manual 60 Hz
    - Carving Out Dedicated Reading Time
12. Sourcing Reliable Information of Perkins Generator Repair Manual 60 Hz
    - Fact-Checking eBook Content of Perkins Generator Repair Manual 60 Hz
    - Distinguishing Credible Sources
13. Promoting Lifelong Learning

- Utilizing eBooks for Skill Development
- Exploring Educational eBooks

14. Embracing eBook Trends
    - Integration of Multimedia Elements
    - Interactive and Gamified eBooks

Perkins Generator Repair Manual 60 Hz Introduction

Free PDF Books and Manuals for Download: Unlocking Knowledge at Your Fingertips In todays fast-paced digital age, obtaining valuable knowledge has become easier than ever. Thanks to the internet, a vast array of books and manuals are now available for free download in PDF format. Whether you are a student, professional, or simply an avid reader, this treasure trove of downloadable resources offers a wealth of information, conveniently accessible anytime, anywhere. The advent of online libraries and platforms dedicated to sharing knowledge has revolutionized the way we consume information. No longer confined to physical libraries or bookstores, readers can now access an extensive collection of digital books and manuals with just a few clicks. These resources, available in PDF, Microsoft Word, and PowerPoint formats, cater to a wide range of interests, including literature, technology, science, history, and much more. One notable platform where you can explore and download free Perkins Generator Repair Manual 60 Hz PDF books and manuals is the internets largest free library. Hosted online, this catalog compiles a vast assortment of documents, making it a veritable goldmine of knowledge. With its easy-to-use website interface and customizable PDF generator, this platform offers a user-friendly experience, allowing individuals to effortlessly navigate and access the information they seek. The availability of free PDF books and manuals on this platform demonstrates its commitment to democratizing education and empowering individuals with the tools needed to succeed in their chosen fields. It allows anyone, regardless of their background or financial limitations, to expand their horizons and gain insights from experts in various disciplines. One of the most significant advantages of downloading PDF books and manuals lies in their portability. Unlike physical copies, digital books can be stored and carried on a single device, such as a tablet or smartphone, saving valuable space and weight. This convenience makes it possible for readers to have their entire library at their fingertips, whether they are commuting, traveling, or simply enjoying a lazy afternoon at home. Additionally, digital files are easily searchable, enabling readers to locate specific information within seconds. With a few keystrokes, users can search for keywords, topics, or phrases, making research and finding relevant information a breeze. This efficiency saves time and effort, streamlining the learning process and allowing individuals to focus on extracting the information they need. Furthermore, the availability of free PDF books and manuals fosters a culture of continuous learning. By removing financial barriers, more people can access educational resources and pursue lifelong

learning, contributing to personal growth and professional development. This democratization of knowledge promotes intellectual curiosity and empowers individuals to become lifelong learners, promoting progress and innovation in various fields. It is worth noting that while accessing free Perkins Generator Repair Manual 60 Hz PDF books and manuals is convenient and cost-effective, it is vital to respect copyright laws and intellectual property rights. Platforms offering free downloads often operate within legal boundaries, ensuring that the materials they provide are either in the public domain or authorized for distribution. By adhering to copyright laws, users can enjoy the benefits of free access to knowledge while supporting the authors and publishers who make these resources available. In conclusion, the availability of Perkins Generator Repair Manual 60 Hz free PDF books and manuals for download has revolutionized the way we access and consume knowledge. With just a few clicks, individuals can explore a vast collection of resources across different disciplines, all free of charge. This accessibility empowers individuals to become lifelong learners, contributing to personal growth, professional development, and the advancement of society as a whole. So why not unlock a world of knowledge today? Start exploring the vast sea of free PDF books and manuals waiting to be discovered right at your fingertips.

FAQs About Perkins Generator Repair Manual 60 Hz Books

How do I know which eBook platform is the best for me? Finding the best eBook platform depends on your reading preferences and device compatibility. Research different platforms, read user reviews, and explore their features before making a choice. Are free eBooks of good quality? Yes, many reputable platforms offer high-quality free eBooks, including classics and public domain works. However, make sure to verify the source to ensure the eBook credibility. Can I read eBooks without an eReader? Absolutely! Most eBook platforms offer webbased readers or mobile apps that allow you to read eBooks on your computer, tablet, or smartphone. How do I avoid digital eye strain while reading eBooks? To prevent digital eye strain, take regular breaks, adjust the font size and background color, and ensure proper lighting while reading eBooks. What the advantage of interactive eBooks? Interactive eBooks incorporate multimedia elements, quizzes, and activities, enhancing the reader engagement and providing a more immersive learning experience. Perkins Generator Repair Manual 60 Hz is one of the best book in our library for free trial. We provide copy of Perkins Generator Repair Manual 60 Hz in digital format, so the resources that you find are reliable. There are also many Ebooks of related with Perkins Generator Repair Manual 60 Hz. Where to download Perkins Generator Repair Manual 60 Hz online for free? Are you looking for Perkins Generator Repair Manual 60 Hz PDF? This is definitely going to save you time and cash in something you should think about. If you trying to find then search around for online. Without a doubt there are numerous these available and many of them have the freedom. However without doubt you receive whatever you purchase. An alternate way to get ideas is

always to check another Perkins Generator Repair Manual 60 Hz. This method for see exactly what may be included and adopt these ideas to your book. This site will almost certainly help you save time and effort, money and stress. If you are looking for free books then you really should consider finding to assist you try this. Several of Perkins Generator Repair Manual 60 Hz are for sale to free while some are payable. If you arent sure if the books you would like to download works with for usage along with your computer, it is possible to download free trials. The free guides make it easy for someone to free access online library for download books to your device. You can get free download on free trial for lots of books categories. Our library is the biggest of these that have literally hundreds of thousands of different products categories represented. You will also see that there are specific sites catered to different product types or categories, brands or niches related with Perkins Generator Repair Manual 60 Hz. So depending on what exactly you are searching, you will be able to choose e books to suit your own need. Need to access completely for Campbell Biology Seventh Edition book? Access Ebook without any digging. And by having access to our ebook online or by storing it on your computer, you have convenient answers with Perkins Generator Repair Manual 60 Hz To get started finding Perkins Generator Repair Manual 60 Hz, you are right to find our website which has a comprehensive collection of books online. Our library is the biggest of these that have literally hundreds of thousands of different products represented. You will also see that there are specific sites catered to different categories or niches related with Perkins Generator Repair Manual 60 Hz So depending on what exactly you are searching, you will be able tochoose ebook to suit your own need. Thank you for reading Perkins Generator Repair Manual 60 Hz. Maybe you have knowledge that, people have search numerous times for their favorite readings like this Perkins Generator Repair Manual 60 Hz, but end up in harmful downloads. Rather than reading a good book with a cup of coffee in the afternoon, instead they juggled with some harmful bugs inside their laptop. Perkins Generator Repair Manual 60 Hz is available in our book collection an online access to it is set as public so you can download it instantly. Our digital library spans in multiple locations, allowing you to get the most less latency time to download any of our books like this one. Merely said, Perkins Generator Repair Manual 60 Hz is universally compatible with any devices to read.

Find Perkins Generator Repair Manual 60 Hz :

science spectrum 20crossword
scope for grade11 business bojanala
scott foresman 5th grade spelling
scoope for grade 10 maths p1 final exam
scotts 42 riding mower belt diagram
scope grade 11 life science

scottburgh high school november exam time table
scientific journals impact factor 2014
~~scott sm 300 manual~~
~~scope for life sciences p1 2014 grade 10~~
scmi superset xl manual
science review finals 8th grade
scientific measurement guided practice problems
scotts push lawn mower parts
scott foresman science grade 5 chapter 3 test

Perkins Generator Repair Manual 60 Hz :

eclipse modeling framework emf eclipsesource - Jun 15 2022
emf forms provides a form based and highly customizable ui based on a given data model the layout of the form based ui can be described in a simple view model this tutorial describes how to customize emf forms e g by adding new controls or by changing the default behavior read the full blog post
eclipse modeling project the eclipse foundation - Sep 06 2021
emf core is a common standard for data models many technologies and frameworks are based on this includes server solutions persistence frameworks ui frameworks and support for transformations please have a look at the modeling project for an overview of emf technologies
eclipse modeling framework guide books acm digital library - May 15 2022
abstract the authoritative guide to the eclipse modeling framework emf written by the lead emf designers shows how emf unifies three important technologies java xml and uml bullet provides a comprehensive overview of the emf classes including a complete quick reference for all the classes and methods in the emf 1 1 api
eclipse modeling emf documents the eclipse foundation - May 27 2023
jul 27 2009 model with the eclipse modeling framework part 2 create uml models and generate code published by ibm developerworks april 27 2004 may 7 2004 xml schema infoset model part 1 first published by ibm developerworks nov 4 2003
eclipse modeling framework wikipedia - Jan 23 2023
eclipse modeling framework emf is an eclipse based modeling framework and code generation facility for building tools and other applications based on a structured data model
eclipse modeling emf core downloads the eclipse - Jul 29 2023

ibm is pleased to contribute translations for the eclipse modeling framework 2 2 x language packs emf sdo 2 2 1 sdk 2 2 1 runtime 2 2 0 sdk 2 2 0 runtime the language packs contain the following translations nlpack1 german spanish french italian japanese korean portuguese brazil traditional chinese simplified chinese

what is eclipse modeling framework stack overflow - Jan 11 2022

jun 19 2011 basically emf is a framework for developing model driven development mdd tools the tools you will be interested in are in the model to text m2t section using tools like jet you can generate logic containing business objects not just simple dtos in

eclipse modeling project the eclipse foundation - Jul 05 2021

the eclipse modeling project focuses on the evolution and promotion of model based development technologies within the eclipse community by providing a unified set of modeling frameworks tooling and standards implementations

emfstore model repository eclipse plugins bundles and - Jul 17 2022

emfstore is a model repository for the eclipse modeling framework emf and features collaborative editing and versioning of models existing versioning systems such as git or svn are focused on textual artifacts and do not work well for models emfstore is specifically designed for models and allows semantic versioning of models

emf eclipse modeling framework workflow stack overflow - Dec 10 2021

nov 30 2012 meta model evolution in the eclipse modeling framework 6 emf eclipse modeling framework in c 1 adding behavior to emf models 1 create eclipse modeling project 6 working with all models in workspace 0 emf for eclipse 0 multiple ecore emf models in eclipse plugin hot network questions applying for a phd as a disabled person

eclipse modeling framework emf tutorial vogella - Sep 30 2023

version 4 0 25 10 2019 eclipse emf this tutorial describes the usage of eclipse emf a framework for modeling your data model and creating java code from it this tutorial is based on eclipse 4 6 eclipse neon learn more in the learning portal check out our eclipse plugin development online training 1 models and eclipse emf 1 1 data model

introduction to the eclipse modeling framework - Mar 13 2022

exercise 1 code generation regeneration and merge exercise 2 emf runtime exercise 3 recording changes exercise 4 validation exercise 5 reflection dynamic emf and xml processor what s new in emf 2 2 summary what is emf a modeling data integration framework exploits the facilities offered in eclipse to

emf eclipse modeling framework 2 0 guide books acm - Aug 18 2022

this book explains how to write java applications using the eclipse modeling framework emf using a model based approach it integrates three technologies java extensible markup language xml and uml emf aims to close or at least narrow the gap between the application designer modeler and the developer

emf eclipse modeling framework second edition o reilly media - Dec 22 2022
the authors illuminate the key concepts and techniques of emf modeling analyze emf s most important framework classes and generator patterns guide you through choosing optimal designs and introduce powerful framework customizations and programming techniques

emf 2 35 0 release latest the eclipse foundation - Jun 27 2023
oct 15 2023 emf rap eclipse modeling framework runtime for the rich ajax platform 2 9 0 14 7kb org eclipse emf rap 2 9 0 v20230211 1150 emf rap edit ui 2 13 0 154 9kb

fundamentals of the eclipse modeling framework - Nov 08 2021
emf is a simple pragmatic approach to modeling allows us to generate some of the code that we write over and over paving the way for more complex systems including more ambitious mda tools models are simple but meant to be mixed with hand written code it s real proven technology since 2002 model driven development with emf

emf 2 29 release the eclipse foundation - Mar 25 2023
dec 24 2022 emf rap eclipse modeling framework runtime for the rich ajax platform 2 8 0 12 9kb org eclipse emf rap 2 8 0 v20180706 1146 emf rap edit ui 2 12 0 150 2kb

emf eclipse plugins bundles and products eclipse - Oct 20 2022
oct 25 2023 emfstore model repository wednesday october 25 2023 08 44 by helming in tum de emfstore is a model repository for the eclipse modeling framework emf and features collaborative editing and versioning of models existing versioning systems such as git or svn modeling modeling tools scm tools 14

eclipse sprotty is officially out of incubation - Aug 06 2021
oct 30 2023 the eclipse foundation features two powerful frameworks for creating textual languages with formal syntax eclipse xtext and eclipse langium xtext is the older project with its origins in 2008 and is built with java around the eclipse modeling framework emf

emf eclipse modeling framework 2 0 guide books acm - Apr 25 2023
this book explains how to write java applications using the eclipse modeling framework emf using a model based approach it integrates three technologies java extensible markup language xml and uml

eclipse emf projects eclipse org - Feb 21 2023
take the survey eclipse emf is a modeling framework and code generation facility for building tools and other applications based on a structured data model

emf compare model comparison and merge eclipse plugins - Jun 03 2021
add this url to your eclipse installation to reach this solution s update site emf compare brings model comparison to the emf

framework this tool provides generic support for any kind of metamodel in order to compare and merge models the objectives of this component are to provide a stable and efficient generic implementation of model

eclipse modeling project the eclipse foundation - Aug 30 2023

emf the core emf framework includes a meta model ecore for describing models and runtime support for the models including change notification persistence support with default xmi serialization and a very efficient reflective api for manipulating emf objects generically

cdo model repository eclipse plugins bundles and products eclipse - Feb 09 2022

the cdo connected data objects model repository is a distributed shared model framework for emf models and meta models cdo is also a model runtime environment with a focus on orthogonal aspects like model scalability transactionality persistence distribution queries and more cdo has a 3 tier architecture supporting emf based client

eclipse modeling framework github - Sep 18 2022

1 follower eclipse org emf emf dev eclipse org overview repositories projects packages people readme md eclipse modeling framework the eclipse emf project provides code generation facilities for building tools and applications based on a structured data model emf readme emf contributing emf updates emf discussions emf issues

eclipse modeling framework eclipsepedia - Apr 13 2022

the eclipse modeling framework project is a modeling framework and code generation facility for building tools and other applications based on a structured data model from a model specification described in xmi emf provides tools and runtime support to produce a set of java classes for the model along with a set of adapter classes that

emf 2 22 release the eclipse foundation - Nov 20 2022

dec 24 2022 emf eclipse modeling framework base runtime 2 22 0 the base runtime for emf this feature contains the fundamental features of emf org eclipse emf common feature group 2 19 0 v20200324 0932 2 19 0 v20200324 0932 org eclipse emf ecore feature group 2 22 0 v20200519 1135 2 22 0 v20200519 1135

eclipse modeling framework container project - Oct 08 2021

eclipse modeling project eclipse modeling framework container project eclipse cdo model repository eclipse emf diff merge eclipse emf eclipse generation factories egf eclipse modeling workflow engine emf teneo model relational database integration

rrb group d questions and answers examsbook - Aug 07 2023

web sep 9 2020 rrb group d previous year papers rrb group d previous year question paper pdf railway rrb group d previous year question papers latest

papers rrb group d exam paper answer key set 1 - Feb 01 2023

web railway group d reasoning questions will mostly cover the following topics analogy blood relation classification series non verbal reasoning puzzles coding decoding
railway group d reasoning question answers 2013 - Mar 22 2022

top 5 reasoning questions for railway group d - May 24 2022
web right here we have countless ebook railway group d reasoning question answers 2013 pdf and collections to check out we additionally allow variant types and then type
railway group d reasoning question answers 2013 pdf murray - Dec 19 2021

rrb group d reasoning questions and answers pdf - Oct 09 2023
web how s it when you can get question answers related to general knowledge and current affairs reasoning maths section as per rrb group d exam pattern in a single blog
reasoning short tricks in hindi railway ntpc group d ssc - Nov 17 2021

rrb group d previous year question papers download free - Jun 24 2022
web apr 18 2023 railway group d reasoning question answers 2013 1 8 downloaded from uniport edu ng on april 18 2023 by guest railway group d reasoning question
reasoning questions for railway exams rrb alp - May 04 2023
web sep 24 2022 as per the rrb group d exam pattern the reasoning paper is going to account for 30 questions from different topics such as seating arrangement coding and
rrb group d previous year reasoning questions - Mar 02 2023
web practice here previous years arithmetic problems of railways group d in the form of quizzes with short trick method and detailed explanation learn how to solve arithmetic problems
reasoning test for rrb group d pdf cracku - Oct 29 2022
web rrb ntpc about press copyright contact us creators advertise developers terms privacy policy safety how youtube works test new features nfl sunday ticket
rrb group d previous year question papers solution - Jun 05 2023
web railway group d reasoning concepts that are usually tested in the exam are listed here for your reference analogy blood relation classification series non verbal reasoning
100 reasoning questions for railway group d pdf 1 meritnotes - Feb 18 2022

rrb group d reasoning questions pdf cracku - Sep 08 2023
web practice important reasoning questions for railway ntpc group d je alp technician asm exams with solutions and explanations rrb reasoning questions with
previous years railways group d questions with solution - Sep 27 2022
web if you are preparing railway rrb alp and rrb group d exams 2018 you will come across a section on general intelligence reasoning here we are providing you with
logical reasoning set 27 level 2 wordpandit - Dec 31 2022
web jul 12 2023 to help students prepare for the exam we have gathered the rrb group d practice set for all the topics that are asked in the exam solving these practice sets can
logical reasoning set 28 level 2 wordpandit - Aug 27 2022
web railway group d reasoning question answers 2013 recognizing the habit ways to get this ebook railway group d reasoning question answers 2013 is additionally useful
rrb reasoning questions with answers 200 railway - Jul 06 2023
web answer keys 1 d 2 c 3 c 4 a 5 a 6 d 7 d 8 b 9 a 10 c 11 a 12 c 13 a 14 b 15 d 16 d 17 c 18 b 19 d 20 a 21 a 22 d 23 b 24 c 25
140 railway rrb group d previous year question papers pdf - Apr 03 2023
web sep 15 2020 download top 15 rrb group d reasoning test pdf rrb group d questions based on asked questions in previous exam papers very important for the
rrb group d 2022 reasoning memory based questions with - Nov 29 2022
web sep 19 2022 practicing the indian railways group d previous year papers will help you with understanding the paper pattern time management and the syllabud here is an
railway rrb group d 2018 reasoning practice questions set 2 - Apr 22 2022
web reasoning set practice part 01 for ssc cgl cpo mts gdchsl army navy ib bank alp drdo sbi
rrb group d practice set download the practice set pdf for free - Jul 26 2022
web model mcq online test error report classification analogy series completion blood relations analytical reasoning puzzle test word formation logical sequence of
railway group d reasoning question answers 2013 pdf - Jan 20 2022

physics ebook r unlv reddit - Jan 25 2022
web oct 4 2023 welcome back to the gridiron notes where we bring you information on updates coming to madden nfl 24

straight from our development team with our next
titel 4 song and lyrics by lawrence spotify - Oct 22 2021

title physics 4th edition wiki lwn net - Mar 27 2022
web physics dissertation topics lipid bilayers and microrheology the lhc era supersymmetry and dark matter transient optomechanical phenomena related to
physics for scientists and engineers google books - Mar 07 2023
web nov 15 2022 august 26 2020 created by importbot imported from better world books record cambridge igcse tm physics 4th edition by heather kennett duncan tom
physics for scientists engineers with modern physics 4th - Dec 04 2022
web extensively rewritten and updated this fourth edition includes all the recent developments in elementary particle physics as well as its connections with cos mology and
cambridge igcse physics textbook fourth edition google books - Sep 13 2023
web mar 26 2021 cambridge igcse physics textbook fourth edition this title is endorsed by cambridge assessment international education to support the full syllabus for
physics for scientists and engineers 4th edition - Nov 03 2022
web 978 0 521 49345 1 optical physics fourth edition a lipson s g lipson and h lipson table of contents more information viii contents 3 4 the matrix formalism of the
physics for scientists and engineers 4th edition chegg - Apr 27 2022
web elektrik ve elektronik mühendisliğine giriş bİl 142 bilgisayar programlama ii mat 102 matematik ii fİz 102 fizik ii fİz 102l fizik laboratuvarı ii
madden nfl 24 title update october 4th 2023 ea sports - Sep 20 2021

15 most exciting titles for a dissertation in physics ultim action - Nov 22 2021

practical physics 4th edition general and classical physics - Jan 05 2023
web sep 28 2007 physics for scientists and engineers with modern physics by douglas c giancoli september 28 2007 prentice hall edition in english physics for scientists
elektrik ve elektronik mühendisliği lisans ders bilgi formları etu - Dec 24 2021

cambridge igcse tm physics 4th edition open library - Feb 06 2023
web this classic companion to undergraduate practical work in physics describes the purposeful critical approach that should be made to all physics experiments it covers
introduction to high energy physics 4th edition - Jul 31 2022
web results of physics education research already one of the best selling textbooks in algebra based physics the fourth edition strengthens both the conceptual foundations and
modern physics 4th edition worldcat org - May 29 2022
web physics ebook this may be a long shot but does anyone have a pdf copy of physics laboratory manual 4th edition by david loyd i ve been searching but only seem to
cambridge igcsetm physics 4th edition google books - Aug 12 2023
web jun 11 2021 cambridge igcsetm physics 4th edition this title is endorsed by cambridge assessment international education to support the full syllabus for
optical physics 4th edition optics optoelectronics and photonics - Apr 08 2023
web jan 6 2016 for the fourth edition of physics for scientists and engineers knight continues to build on strong research based foundations with fine tuned and streamlined
hodder cambridge igcse physics 4th edition - Jul 11 2023
web r 283 2 printed in the united states of america first edition 1951 second edition 1959 revisions 1963 1965 1967 1968 1969 1970 1973 third edition 1978 fourth edition 1
physics rent 9780321611116 chegg com - Oct 02 2022
web this is one of the best books i ve come across to begin with the study of modern physics it is essentially an introductory course on quantum mechanics and special relativity and
cambridge igcse tm physics 4th edition worldcat org - May 09 2023
web this fourth edition of a well established textbook takes students from fundamental ideas to the most modern developments in optics illustrated with 400 figures it contains
download cambridge igcse physics by kennett - Sep 01 2022
web jan 4 2016 coupon rent physics for scientists and engineers a strategic approach with modern physics 4th edition 9780133942651 and save up to 80 on textbook
top 10 titles in physics in 2018 world scientific publishing co - Feb 23 2022
web lawrence song 2002
aip style manual aip publishing llc - Jun 10 2023

web get this from a library cambridge igcse tm physics 4th edition heather kennett tom duncan roger wood this title is endorsed by cambridge assessment international

7 5 x 11 long title cambridge university press assessment - Jun 29 2022

web jan 28 2019 enjoy 35 off 2 books with code wstop10books by 28 jan 2019 lectures of sidney coleman on quantum field theory edited by bryan gin ge chen