19. Disconnect cam phase sensor (near oil filter).

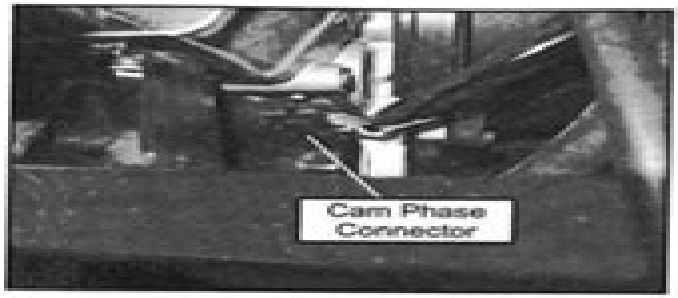

20. Remove the outer clutch cover with PVT outlet duct, drive belt, drive clutch, driven clutch and inner clutch cover (see Chapter 6 "Clutching").
21. Remove the rear PVT inlet hose from the engine crankcase.
22. Disconnect the engine coolant temperature (ECT) sensor harness and the bypass coolant hose from the left side of the cylinder head.

23. Remove the coolant hoses from the engine. Properly dispose of any coolant drained from the engine or hoses.
24. Remove the battery cables from the starter motor. When removing starter cables, note and mark ground cable and positive (+) cable mounting angle and locations.
25. Remove engine mount fasteners as shown below.

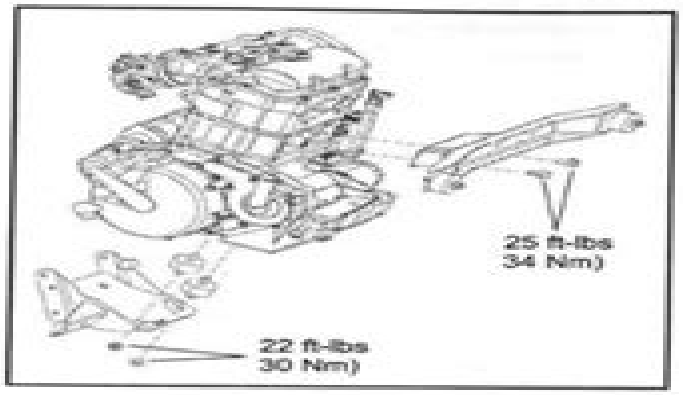

26. Carefully remove the engine through the top of the seat base frame. Lift the engine forward to free it from the rear mount and then lift the engine out from the vehicle.

NOTE: Rotating the engine to the left 90 degrees (valve cover facing left) may ease engine removal.

NOTE: Use caution when lifting the engine out of frame. Use an engine lift or other means, if the engine appears too heavy to be lifted manually.

© Copyright 2013 Polaris Sales Inc.

repairmanual.com

Polaris Ranger 800 Ho Manual

Scott C. Dulebohn

Polaris Ranger 800 Ho Manual:

Technical Abstract Bulletin ,1967 **Union Agriculturist and Western Prairie Farmer** ,2006 **Clymer Polaris Ranger 800, 2010-2014** Haynes Publishing,2017-10-25 The Clymer Polaris Ranger 800 2010 2014 Repair Manual features complete maintenance and repair information for the Polaris RZR 800 built during model years 2008 2014 More than 700 Photos guide the reader through every job Where possible tools developed by the writers during the disassembly and reassembly of the machine are described in the text to save the reader from spending hundreds of dollars on factory tools Each manual features quick reference data plus chapters on Troubleshooting Lubrication maintenance and tune up Engine top end Engine lower end Clutch and drivebelt system Transmission Engine management system Electrical system Cooling system Wheels hubs and tires Front suspension steering and front gearcase Rear suspension and rear gearcase Brakes Body Wiring diagrams **Moody's International Manual** ,1996 Mergent International Manual ,2009 **Iowa Conservationist** ,2001 **Boating** ,1998-01 *QST.* ,1967 **Model Railroad Craftsman** ,1958 *Commerce Business Daily* ,2000-06 **Backpacker** ,2000-03 Backpacker brings the outdoors straight to the reader s doorstep inspiring and enabling them to go more places and enjoy nature more often The authority on active adventure Backpacker is the world s first GPS enabled magazine and the only magazine whose editors personally test the hiking trails camping gear and survival tips they publish Backpacker s Editors Choice Awards an industry honor recognizing design feature and product innovation has become the gold standard against which all other outdoor industry awards are measured *Thomas Register of American Manufacturers and Thomas Register Catalog File* ,1997 Vols for 1970 71 includes manufacturers catalogs

Farmers and Consumers Market Bulletin ,2009 **Astronautics** ,1962 **Pacific Fisherman** ,1962 Since 1926 includes the Annual statistical number which supersedes the Pacific fisherman year book **TCI** ,1998 Atlantic Fisherman ,1982-05 **Bulletin of the Atomic Scientists** ,1963-05 The Bulletin of the Atomic Scientists is the premier public resource on scientific and technological developments that impact global security Founded by Manhattan Project Scientists the Bulletin s iconic Doomsday Clock stimulates solutions for a safer world Bulletin of the Atomic Scientists ,1963-05 The Bulletin of the Atomic Scientists is the premier public resource on scientific and technological developments that impact global security Founded by Manhattan Project Scientists the Bulletin s iconic Doomsday Clock stimulates solutions for a safer world **Astronomy** ,1997

Whispering the Secrets of Language: An Mental Quest through **Polaris Ranger 800 Ho Manual**

In a digitally-driven earth where monitors reign great and instant conversation drowns out the subtleties of language, the profound techniques and mental subtleties concealed within words frequently get unheard. Yet, nestled within the pages of **Polaris Ranger 800 Ho Manual** a charming fictional treasure pulsating with fresh emotions, lies an extraordinary journey waiting to be undertaken. Published by a talented wordsmith, this enchanting opus attracts viewers on an introspective journey, softly unraveling the veiled truths and profound impact resonating within the very material of each and every word. Within the mental depths with this touching evaluation, we will embark upon a heartfelt exploration of the book is core styles, dissect its fascinating writing type, and yield to the effective resonance it evokes deep within the recesses of readers hearts.

https://crm.avenza.com/results/scholarship/Documents/respectful%20communication%20guidelines.pdf

Table of Contents Polaris Ranger 800 Ho Manual

1. Understanding the eBook Polaris Ranger 800 Ho Manual
    - The Rise of Digital Reading Polaris Ranger 800 Ho Manual
    - Advantages of eBooks Over Traditional Books
2. Identifying Polaris Ranger 800 Ho Manual
    - Exploring Different Genres
    - Considering Fiction vs. Non-Fiction
    - Determining Your Reading Goals
3. Choosing the Right eBook Platform
    - Popular eBook Platforms
    - Features to Look for in an Polaris Ranger 800 Ho Manual
    - User-Friendly Interface
4. Exploring eBook Recommendations from Polaris Ranger 800 Ho Manual
    - Personalized Recommendations

    - Polaris Ranger 800 Ho Manual User Reviews and Ratings
    - Polaris Ranger 800 Ho Manual and Bestseller Lists
5. Accessing Polaris Ranger 800 Ho Manual Free and Paid eBooks
    - Polaris Ranger 800 Ho Manual Public Domain eBooks
    - Polaris Ranger 800 Ho Manual eBook Subscription Services
    - Polaris Ranger 800 Ho Manual Budget-Friendly Options
6. Navigating Polaris Ranger 800 Ho Manual eBook Formats
    - ePub, PDF, MOBI, and More
    - Polaris Ranger 800 Ho Manual Compatibility with Devices
    - Polaris Ranger 800 Ho Manual Enhanced eBook Features
7. Enhancing Your Reading Experience
    - Adjustable Fonts and Text Sizes of Polaris Ranger 800 Ho Manual
    - Highlighting and Note-Taking Polaris Ranger 800 Ho Manual
    - Interactive Elements Polaris Ranger 800 Ho Manual
8. Staying Engaged with Polaris Ranger 800 Ho Manual
    - Joining Online Reading Communities
    - Participating in Virtual Book Clubs
    - Following Authors and Publishers Polaris Ranger 800 Ho Manual
9. Balancing eBooks and Physical Books Polaris Ranger 800 Ho Manual
    - Benefits of a Digital Library
    - Creating a Diverse Reading Collection Polaris Ranger 800 Ho Manual
10. Overcoming Reading Challenges
    - Dealing with Digital Eye Strain
    - Minimizing Distractions
    - Managing Screen Time
11. Cultivating a Reading Routine Polaris Ranger 800 Ho Manual
    - Setting Reading Goals Polaris Ranger 800 Ho Manual
    - Carving Out Dedicated Reading Time
12. Sourcing Reliable Information of Polaris Ranger 800 Ho Manual
    - Fact-Checking eBook Content of Polaris Ranger 800 Ho Manual

- Distinguishing Credible Sources

13. Promoting Lifelong Learning
    - Utilizing eBooks for Skill Development
    - Exploring Educational eBooks
14. Embracing eBook Trends
    - Integration of Multimedia Elements
    - Interactive and Gamified eBooks

Polaris Ranger 800 Ho Manual Introduction

In this digital age, the convenience of accessing information at our fingertips has become a necessity. Whether its research papers, eBooks, or user manuals, PDF files have become the preferred format for sharing and reading documents. However, the cost associated with purchasing PDF files can sometimes be a barrier for many individuals and organizations. Thankfully, there are numerous websites and platforms that allow users to download free PDF files legally. In this article, we will explore some of the best platforms to download free PDFs. One of the most popular platforms to download free PDF files is Project Gutenberg. This online library offers over 60,000 free eBooks that are in the public domain. From classic literature to historical documents, Project Gutenberg provides a wide range of PDF files that can be downloaded and enjoyed on various devices. The website is user-friendly and allows users to search for specific titles or browse through different categories. Another reliable platform for downloading Polaris Ranger 800 Ho Manual free PDF files is Open Library. With its vast collection of over 1 million eBooks, Open Library has something for every reader. The website offers a seamless experience by providing options to borrow or download PDF files. Users simply need to create a free account to access this treasure trove of knowledge. Open Library also allows users to contribute by uploading and sharing their own PDF files, making it a collaborative platform for book enthusiasts. For those interested in academic resources, there are websites dedicated to providing free PDFs of research papers and scientific articles. One such website is Academia.edu, which allows researchers and scholars to share their work with a global audience. Users can download PDF files of research papers, theses, and dissertations covering a wide range of subjects. Academia.edu also provides a platform for discussions and networking within the academic community. When it comes to downloading Polaris Ranger 800 Ho Manual free PDF files of magazines, brochures, and catalogs, Issuu is a popular choice. This digital publishing platform hosts a vast collection of publications from around the world. Users can search for specific titles or explore various categories and genres. Issuu offers a seamless reading experience with its user-friendly interface and allows users to download PDF files for offline reading. Apart from dedicated platforms, search engines also play a crucial role in finding free PDF files. Google, for instance, has an advanced

search feature that allows users to filter results by file type. By specifying the file type as "PDF," users can find websites that offer free PDF downloads on a specific topic. While downloading Polaris Ranger 800 Ho Manual free PDF files is convenient, its important to note that copyright laws must be respected. Always ensure that the PDF files you download are legally available for free. Many authors and publishers voluntarily provide free PDF versions of their work, but its essential to be cautious and verify the authenticity of the source before downloading Polaris Ranger 800 Ho Manual. In conclusion, the internet offers numerous platforms and websites that allow users to download free PDF files legally. Whether its classic literature, research papers, or magazines, there is something for everyone. The platforms mentioned in this article, such as Project Gutenberg, Open Library, Academia.edu, and Issuu, provide access to a vast collection of PDF files. However, users should always be cautious and verify the legality of the source before downloading Polaris Ranger 800 Ho Manual any PDF files. With these platforms, the world of PDF downloads is just a click away.

FAQs About Polaris Ranger 800 Ho Manual Books

How do I know which eBook platform is the best for me? Finding the best eBook platform depends on your reading preferences and device compatibility. Research different platforms, read user reviews, and explore their features before making a choice. Are free eBooks of good quality? Yes, many reputable platforms offer high-quality free eBooks, including classics and public domain works. However, make sure to verify the source to ensure the eBook credibility. Can I read eBooks without an eReader? Absolutely! Most eBook platforms offer web-based readers or mobile apps that allow you to read eBooks on your computer, tablet, or smartphone. How do I avoid digital eye strain while reading eBooks? To prevent digital eye strain, take regular breaks, adjust the font size and background color, and ensure proper lighting while reading eBooks. What the advantage of interactive eBooks? Interactive eBooks incorporate multimedia elements, quizzes, and activities, enhancing the reader engagement and providing a more immersive learning experience. Polaris Ranger 800 Ho Manual is one of the best book in our library for free trial. We provide copy of Polaris Ranger 800 Ho Manual in digital format, so the resources that you find are reliable. There are also many Ebooks of related with Polaris Ranger 800 Ho Manual. Where to download Polaris Ranger 800 Ho Manual online for free? Are you looking for Polaris Ranger 800 Ho Manual PDF? This is definitely going to save you time and cash in something you should think about.

Find Polaris Ranger 800 Ho Manual :

respectful communication guidelines

restaurant guide melbourne vic
respond for thuthuka bursary for 2015
~~retribution leveling guide~~
restaurant guide thousand oaks
reteaching 31 world war 2 answers
restore me wrecked book english edition
reverse forward motor flot switch control circuit
retour de laudelagrave agrave burdigala roman roman
respironics evergo user manual
revealing heaven volume kat kerr
resnick halliday physics iit jee
retail prescription drug list walmart
retour agrave saintjohn prelud t
reteaching activity psychological disorders study guide

Polaris Ranger 800 Ho Manual :

dinosaurs a concise natural history amazon com - Apr 16 2023
web aug 27 2012 dinosaurs a concise natural history david e fastovsky david b weishampel cambridge university press aug 27 2012 science 425 pages updated
dinosaurs extinction timeline definition history - Jan 01 2022

dinosaurs a concise natural history 2 nd edition oxford - Jul 07 2022
web nov 28 2016 here we provide an overview of the first 50 million years of dinosaur history with a focus on the large scale patterns that characterize the ascent of
dinosaurs a concise natural history request pdf - Apr 04 2022
web 1 day ago dinosaurs the prehistoric reptiles known as dinosaurs arose during the middle to late triassic period of the mesozoic era some 230 million years ago they
dinosaurs national geographic society - Feb 02 2022
web to the student dinosaurs a concise natural history has been written to introduce you to dinosaurs amazing creatures that lived millions of years before there were humans

dinosaurs a concise natural history google books - Mar 15 2023
web dinosaurs a concise natural history amazon com tr kitap Çerez tercihlerinizi seçin Çerez bildirimimizde ayrıntılı şekilde açıklandığı üzere alışveriş yapmanızı sağlamak
dinosaurs a concise natural history google books - Oct 10 2022
web apr 24 2013 thereafter the text settles into descriptions of dinosaur groups with an emphasis on their likely natural history the habitats of various species are now much
dinosaurs a concise natural history danny yee - Mar 03 2022
web sep 12 2023 dinosaur national monument is famous for its remarkable dinosaur quarry today visitors have the opportunity to see the bones in situ which means that bones
dinosaurs a concise natural history request pdf - May 17 2023
web aug 27 2012 dinosaurs a concise natural history is a college level or perhaps late high school textbook on every known aspect of the dinosauria subjects include the use
dinosaurs a concise natural history google books - Jun 18 2023
web jul 1 2021 dinosaurs a concise natural history july 2021 authors d e fastovsky university of rhode island dave weishampel johns hopkins university john sibbick
dinosaurs a concise natural history amazon com - Aug 20 2023
web nov 28 2016 dinosaurs a concise natural history 3rd edition by david e fastovsky author david b weishampel author john sibbick illustrator 0 more 4 6 4 6 out of
dinosaurs a concise natural history paperback amazon ca - May 05 2022
web dinosaurs gambol and charge through our imagination as scaly reptilian creatures with menacing teeth claws spikes and hammering bony bulbs they roamed earth roughly
the dinosaurs of dinosaur u s national park service - Nov 30 2021

dinosaurs a concise natural history amazon com tr kitap - Feb 14 2023
web apr 24 2013 dinosaurs a concise natural history 2 nd edition by david e fastovsky and david b weishampel cambridge cambridge university press 2012
dinosaurs a concise natural history paperback - Nov 11 2022
web jan 12 2009 4 19 167 ratings16 reviews from the authors of the evolution and extinction of the dinosaurs comes an introduction to the study of dinosaurs for non specialists
dinosaurs a concise natural history 2nd edition by david e - Jan 13 2023

web jul 1 2021 françois therrien royal tyrrell museum of palaeontology canada my highest praise for the 4th edition of dinosaurs a concise natural history a plethora of color

dinosaurs a concise natural history paperback amazon co uk - Jun 06 2022

web the core of a concise natural history works through the dinosaurs major group by group thyreophora including stegosaurs and ankylosaurs marginocephalia including the

dinosaurs concise natural history 4th edition zoology - Sep 21 2023

web aug 5 2021 fully updated and with brand new illustrations dinosaurs a concise natural history is the best textbook on the market to guide students and instructors alike navigate through the ever evolving field of dinosaur paleontology

dinosaurs a concise natural history fastovsky - Jul 19 2023

web jan 12 2009 dinosaurs a concise natural history david e fastovsky david b weishampel cambridge university press jan 12 2009 science 379 pages from the

dinosaurs a concise natural history 4th edition - Aug 08 2022

web jul 1 2021 classical and recent techniques used in dinosaur study are incorporated into the text the book includes information on dinosaurs themselves geology their biology

dinosaurs a concise natural history goodreads - Sep 09 2022

web jul 1 2021 buy dinosaurs a concise natural history 4 by fastovsky david e weishampel david b sibbick john isbn 9781108469296 from amazon s book

dinosaurs a concise natural history amazon com - Dec 12 2022

web jul 1 2021 dinosaurs a concise natural history david e fastovsky david b weishampel cambridge university press jul 1 2021 science 0 reviews reviews

dinosaurs a concise natural history silo pub - Oct 30 2021

stark leo Übersetzung im englisch deutsch wörterbuch - May 01 2022

web stellenangebote lernen sie die Übersetzung für stark in leos englisch deutsch wörterbuch mit flexionstabellen der verschiedenen fälle und zeiten aussprache und relevante diskussionen kostenloser vokabeltrainer

stark english meaning cambridge dictionary - Mar 31 2022

web stark definition 1 empty simple or obvious especially without decoration or anything that is not necessary 2 learn more

stark training gymnasium deutsch aufsatz 7 8 klas pdf - Jun 02 2022

web stark training gymnasium deutsch aufsatz 7 8 klas training intensiv literary translation reception and transfer deutsche nationalbibliographie und bibliographie der im ausland erschienenen deutschsprachigen veröffentlichungen destination b1

remains of the summer present progressive simple englisch 5 klasse

stark training gymnasium deutsch aufsatz 7 8 klasse by frank - May 13 2023

web training gymnasium deutsch aufsatz 7 8 klasse training deutsch 7 8 1 aufsatz 7 8 klasse deutsch 7 klasse gymnasium themen übungsaufgaben training grundwissen deutsch aufsatz 7 8 klasse frank stark deutsch

stark klassenarbeiten gymnasium deutsch 8 klasse - Dec 08 2022

web stark klassenarbeiten gymnasium deutsch 8 klasse von dirk wegner isbn 978 3 86668 547 5 bestellen schnelle lieferung auch auf rechnung lehmanns de

stark training gymnasium deutsch aufsatz 7 8 klas copy - Aug 04 2022

web stark training gymnasium deutsch 5 6 klasse oct 29 2022 deutsch training plus klassenarbeiten 7 schülerarbeitsheft mit lösungen klasse 7 dec 27 2019 kompetenzen themen training 7 arbeitsheft arbeitsbuch für den deutschunterricht am gymnasium in bayern jan 20 2022 stark training gymnasium deutsch

training gymnasium deutsch aufsatz 7 8 klasse - Oct 18 2023

web training gymnasium deutsch aufsatz 7 8 klasse die ideale vorbereitung auf den unterricht und auf klassenarbeiten der 7 und 8 klassen an gymnasien umfangreiches training zu allen wichtigen aufsatzarten inhaltsangabe protokoll argumentation und erörterung kurzreferat

training gymnasium deutsch aufsatz 7 8 klasse - Sep 17 2023

web die klasse 8 b noch einmal einen skikurs zu machen diejenigen stichworte durch aus denen sich keine überzeugenden argumente formulieren lassen a schule muss die sportlichen interessen der schülerschaft vertreten b förderung der klassengemeinschaft c letzte möglichkeit für klassenfahrt vor der 11 klasse

stark training gymnasium deutsch aufsatz 7 8 klasse - Aug 16 2023

web training gymnasium deutsch aufsatz 7 8 klasse die ideale vorbereitung auf den unterricht und auf klassenarbeiten der 7 und 8 klassen an gymnasien umfangreiches training zu allen wichtigen aufsatzarten inhaltsangabe protokoll argumentation und erörterung kurzreferat

training grundwissen deutsch aufsatz 7 8 klasse thalia - Jul 15 2023

web training gymnasium deutsch aufsatz 7 8 klasse die ideale vorbereitung auf den unterricht und auf klassenarbeiten der 7 und 8 klassen an gymnasien umfangreiches training zu allen wichtigen aufsatzarten inhaltsangabe protokoll argumentation und erörterung kurzreferat

stark stark in deutsch gymnasium argumentieren 7 8 klasse stark - Mar 11 2023

web stark in deutsch gymnasium argumentieren 7 8 klasse dieser band liefert abwechslungsreiches Übungsmaterial zum selbstständigen trainieren und Üben des argumentierens er eignet sich insbesondere zur vorbereitung auf klassenarbeiten

der band enthält einprägsame tipps und schülergerechte wissenskästen
stark training gymnasium deutsch aufsatz 7 8 klasse by frank - Jun 14 2023
web aufsatz stark in deutsch 7 schulstufe sprachlesebuch abbildungen und probeseiten seite 18 19 herunterladen 114 2 kb seite 78 herunterladen 98 9 kb seite 81 herunterladen 77 8 kb seite 98 99 herunterladen 218 2 kb 9 76 zzgl versandkosten lieferbar anzahl in den warenkorb stark training realschule deutsch aufsatz 7 8 klasse stark stark in
stark training gymnasium deutsch aufsatz 7 8 klas pdf - Feb 10 2023
web stark training gymnasium deutsch aufsatz 7 8 klas Übertritt in die oberstufe apr 05 2023 training deutsch gymnasium schuljahr aug 29 2022 training deutsch gymnasium schuljahr sep 29 2022 klett kompletttrainer gymnasium deutsch 5 klasse mar 24 2022 deutsch kompletttrainer für schülerinnen und schüler der 5
stark training gymnasium deutsch aufsatz 7 8 klasse by frank - Nov 07 2022
web training gymnasium deutsch aufsatz 7 8 klasse die ideale vorbereitung auf den unterricht und auf klassenarbeiten der 7 und 8 klassen an gymnasien umfangreiches training zu allen wichtigen aufsatzarten
stark training gymnasium deutsch aufsatz 7 8 klas book - Jan 09 2023
web themen für den selbstunterricht aufbereitet niveau realschule gymnasium weiterhin empfohlen training deutsch sep 08 2023 training deutsch aufsatz schuljahr jun 24 2022 aufsatz im griff deutsch 5 6 klasse apr 03 2023 mit diesem Übungsbuch trainierst du alle wichtigen aufsatzarten der 5 6 klasse
klassenarbeiten gymnasium deutsch 7 klasse - Apr 12 2023
web 13 95 produktdetails verlagsnummer 104072 isbn 978 3 8490 5599 8 produkttyp buch erscheinungsdatum 24 02 2023 seiten 114 reihe klassenarbeiten und klausuren artikelbeschreibung klassenarbeiten gymnasium deutsch 7 klasse der perfekte band zur selbstständigen vorbereitung auf klassenarbeiten und tests im fach deutsch in der
stark training gymnasium deutsch aufsatz 7 8 klas download - Jul 03 2022
web aufsatz argumentieren und errtern deutsch klasse 7 8 jul 04 2022 besser formulieren im aufsatz klassen 7 8 jun 22 2021 bessere noten im aufsatz dieser wunsch vieler schlerinnen und schler kann wirklichkeit werden denn ausdruck und stil knnen trainiert werden mit diesem band erhalten sie die richtigen materialien um mit ihren schlerin im
stark training gymnasium deutsch aufsatz 7 8 klasse by frank - Oct 06 2022
web sep 12 2023 8 klasse gymnasium über 80 stark training gymnasium deutsch aufsatz 7 8 klasse stark training gymnasium deutsch aufsatz 7 8 klasse stark training gymnasium deutsch grammatik und stil 5 6 training grundwissen deutsch aufsatz 7 8
stark training gymnasium deutsch aufsatz 7 8 klas pdf - Sep 05 2022
web deutsch na klar uses a solid four skills approach with a difference the vocabulary grammar and reading sections are

integrated with authentic materials allowing students to learn language and culture simultaneously
german english translation for stark langenscheidt - Feb 27 2022
web translation for stark using the free german english dictionary by langenscheidt with examples synonyms and pronunciation
interfacing of 8253 to a 8085 microprocessor 2022 - Dec 26 2021

interfacingof8253toa8085microprocessor download only - Nov 24 2021

interfacing of 8253 to a 8085 microprocessor pdf uniport edu - Oct 24 2021

interfacing of 8085 with 8255 programmable peripheral - Feb 08 2023
web may 14 2023 here are the steps to interface the 8254 pit with the 8085 microprocessor connect the address and data lines between the 8254 pit and the 8085
interfacing of 8253 to a 8085 microprocessor borivoje furht copy - Aug 02 2022
web this microprocessor consists of 40 pins as well as works with 5v power supply this processor can be work at a 3mhz of maximum frequency this processor is available in
ic 8253 microprocessor slideshare - Nov 05 2022
web interfacing of 8253 to a 8085 microprocessor 5 students a detailed knowledge of programming and interfacing of intel 8085 and peripherals it is intended for students
interfacing of 8253 to a 8085 microprocessor copy - May 31 2022
web the 8085 microprocessor interfacing to s 100 ieee 696 microcomputers digital design for computer data acquisition the x86 microprocessor 2e microprocessor
interfacing of 8253 to a 8085 microprocessor download only - Oct 04 2022
web interfacing of 8253 to a 8085 microprocessor dac interfacing with 8085 microprocessor 1 dac 0800 features ü to convert the digital signal to analog signal a
interfacing of 8253 to a 8085 microprocessor lia erc gov - Apr 29 2022
web the first part focuses on 8085 microprocessor it teaches you the 8085 architecture instruction set assembly language programming alp interfacing 8085 with support
8253 programmable interval timer eeeguide com - Jul 13 2023
web the intel 8253 and 8254 are programmable interval timers ptis designed for microprocessors to perform timing and

counting functions using three 16 bit registers
intel 8253 programmable interval timer online - May 11 2023
web overall microcomputer system operation peripheral chips such as 8255 8253 8259 8257 and 8279 to interface with 8085 microprocessor and to program it for different
programmable interval timer 8253 8254 peripheral interfacing - Apr 10 2023
web interfacing of 8253 to a 8085 microprocessor microprocessor and interfacing oct 29 2022 the book is written for an undergraduate course on the 8085 microprocessor it
8085 microprocessor pin configuration and its working elprocus - Feb 25 2022

interface 8254 pit with 8085 microprocessor geeksforgeeks - Sep 03 2022
web there are two types of interfacing in context of the 8085 processor memory interfacing i o interfacing memory interfacing while executing an instruction there is a necessity
interfacing 8253 54 timer chip with 8085 microprocessor - Jun 12 2023
web apr 17 2018 programmable interval timer 8253 8254 video lecture of study and interfacing of peripherals with 8085 in chapter from microprocessor subject for
free interfacing of 8253 to a 8085 microprocessor - Jan 07 2023
web interfacing of 8253 to a 8085 microprocessor this is likewise one of the factors by obtaining the soft documents of this interfacing of 8253 to a 8085 microprocessor by
interfacing 8253 timer ic with 8085 microprocessor - Aug 14 2023
web jun 26 2020 interfacing 8253 timer ic with 8085 microprocessor the intel 8253 is programmable interval timers ptis designed for microprocessors toper form timing
interfacing of 8253 to a 8085 microprocessor pdf uniport edu - Jan 27 2022

microprocessor 8254 programmable interval timer - Mar 09 2023
web provides comprehensive coverage of the programming and interfacing of the 8 bit microprocessor written in a simple and easy to understand manner this book
interfacing the 8085 microprocessor bright hub engineering - Mar 29 2022
web jul 22 2023 interfacing of 8253 to a 8085 microprocessor 1 14 downloaded from uniport edu ng on july 22 2023 by guest interfacing of 8253 to a 8085
interfacing of 8253 to a 8085 microprocessor download only - Dec 06 2022

web apr 8 2022 subject microprocessorvideo name interfacing of 8085 microprocessor with 8259 picchapter study and interfacing of peripherals 8155 8255 8253 8254 82

interfacing of 8085 microprocessor with 8259 pic youtube - Jul 01 2022

web aug 16 2023 getting the books interfacing of 8253 to a 8085 microprocessor now is not type of challenging means you could not lonesome going gone ebook increase or library