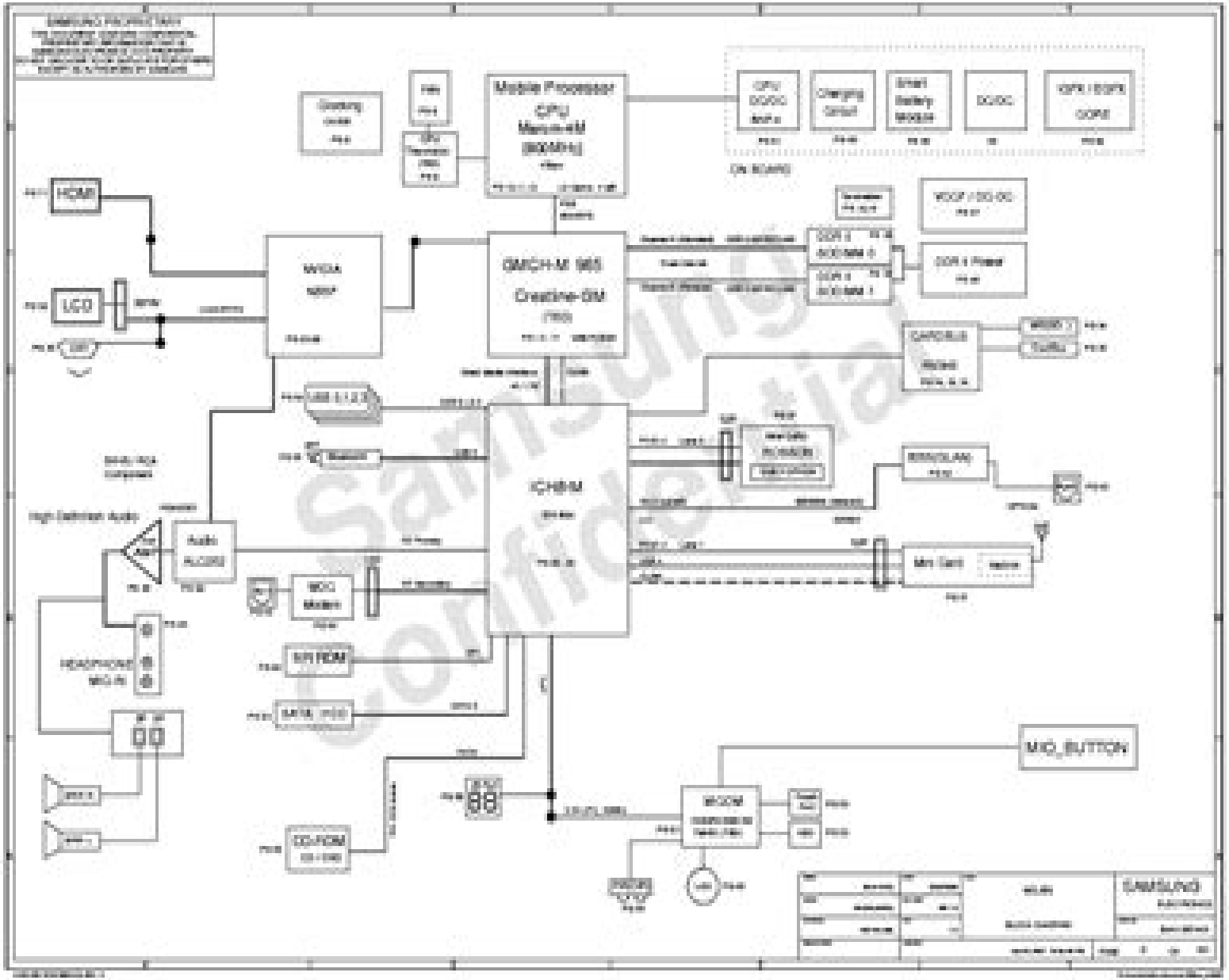
Mobile Processor
CPU
Charging Circuit
Smart Battery Module
DC/DC
HDMI
LCD
GMCH-M 965
Creatine-GM
ICH8M
High Definition Audio
Audio
MIC_BUTTON
SAMSUNG

Samsung Np M60 Service Manual Repair Guide

Pharm Ibrahim

Samsung Np M60 Service Manual Repair Guide:

Recognizing the way ways to get this books **Samsung Np M60 Service Manual Repair Guide** is additionally useful. You have remained in right site to begin getting this info. acquire the Samsung Np M60 Service Manual Repair Guide join that we come up with the money for here and check out the link.

You could buy guide Samsung Np M60 Service Manual Repair Guide or get it as soon as feasible. You could quickly download this Samsung Np M60 Service Manual Repair Guide after getting deal. So, when you require the books swiftly, you can straight acquire it. Its in view of that completely simple and correspondingly fats, isnt it? You have to favor to in this make public

https://crm.avenza.com/files/browse/default.aspx/Resonet%20Sample%20Papers%20With%20Answer%20Key.pdf

Table of Contents Samsung Np M60 Service Manual Repair Guide

1. Understanding the eBook Samsung Np M60 Service Manual Repair Guide
    - The Rise of Digital Reading Samsung Np M60 Service Manual Repair Guide
    - Advantages of eBooks Over Traditional Books
2. Identifying Samsung Np M60 Service Manual Repair Guide
    - Exploring Different Genres
    - Considering Fiction vs. Non-Fiction
    - Determining Your Reading Goals
3. Choosing the Right eBook Platform
    - Popular eBook Platforms
    - Features to Look for in an Samsung Np M60 Service Manual Repair Guide
    - User-Friendly Interface
4. Exploring eBook Recommendations from Samsung Np M60 Service Manual Repair Guide
    - Personalized Recommendations
    - Samsung Np M60 Service Manual Repair Guide User Reviews and Ratings
    - Samsung Np M60 Service Manual Repair Guide and Bestseller Lists

5. Accessing Samsung Np M60 Service Manual Repair Guide Free and Paid eBooks
    - Samsung Np M60 Service Manual Repair Guide Public Domain eBooks
    - Samsung Np M60 Service Manual Repair Guide eBook Subscription Services
    - Samsung Np M60 Service Manual Repair Guide Budget-Friendly Options
6. Navigating Samsung Np M60 Service Manual Repair Guide eBook Formats
    - ePub, PDF, MOBI, and More
    - Samsung Np M60 Service Manual Repair Guide Compatibility with Devices
    - Samsung Np M60 Service Manual Repair Guide Enhanced eBook Features
7. Enhancing Your Reading Experience
    - Adjustable Fonts and Text Sizes of Samsung Np M60 Service Manual Repair Guide
    - Highlighting and Note-Taking Samsung Np M60 Service Manual Repair Guide
    - Interactive Elements Samsung Np M60 Service Manual Repair Guide
8. Staying Engaged with Samsung Np M60 Service Manual Repair Guide
    - Joining Online Reading Communities
    - Participating in Virtual Book Clubs
    - Following Authors and Publishers Samsung Np M60 Service Manual Repair Guide
9. Balancing eBooks and Physical Books Samsung Np M60 Service Manual Repair Guide
    - Benefits of a Digital Library
    - Creating a Diverse Reading Collection Samsung Np M60 Service Manual Repair Guide
10. Overcoming Reading Challenges
    - Dealing with Digital Eye Strain
    - Minimizing Distractions
    - Managing Screen Time
11. Cultivating a Reading Routine Samsung Np M60 Service Manual Repair Guide
    - Setting Reading Goals Samsung Np M60 Service Manual Repair Guide
    - Carving Out Dedicated Reading Time
12. Sourcing Reliable Information of Samsung Np M60 Service Manual Repair Guide
    - Fact-Checking eBook Content of Samsung Np M60 Service Manual Repair Guide
    - Distinguishing Credible Sources
13. Promoting Lifelong Learning

- Utilizing eBooks for Skill Development
- Exploring Educational eBooks

14. Embracing eBook Trends
    - Integration of Multimedia Elements
    - Interactive and Gamified eBooks

Samsung Np M60 Service Manual Repair Guide Introduction

Samsung Np M60 Service Manual Repair Guide Offers over 60,000 free eBooks, including many classics that are in the public domain. Open Library: Provides access to over 1 million free eBooks, including classic literature and contemporary works. Samsung Np M60 Service Manual Repair Guide Offers a vast collection of books, some of which are available for free as PDF downloads, particularly older books in the public domain. Samsung Np M60 Service Manual Repair Guide : This website hosts a vast collection of scientific articles, books, and textbooks. While it operates in a legal gray area due to copyright issues, its a popular resource for finding various publications. Internet Archive for Samsung Np M60 Service Manual Repair Guide : Has an extensive collection of digital content, including books, articles, videos, and more. It has a massive library of free downloadable books. Free-eBooks Samsung Np M60 Service Manual Repair Guide Offers a diverse range of free eBooks across various genres. Samsung Np M60 Service Manual Repair Guide Focuses mainly on educational books, textbooks, and business books. It offers free PDF downloads for educational purposes. Samsung Np M60 Service Manual Repair Guide Provides a large selection of free eBooks in different genres, which are available for download in various formats, including PDF. Finding specific Samsung Np M60 Service Manual Repair Guide, especially related to Samsung Np M60 Service Manual Repair Guide, might be challenging as theyre often artistic creations rather than practical blueprints. However, you can explore the following steps to search for or create your own Online Searches: Look for websites, forums, or blogs dedicated to Samsung Np M60 Service Manual Repair Guide, Sometimes enthusiasts share their designs or concepts in PDF format. Books and Magazines Some Samsung Np M60 Service Manual Repair Guide books or magazines might include. Look for these in online stores or libraries. Remember that while Samsung Np M60 Service Manual Repair Guide, sharing copyrighted material without permission is not legal. Always ensure youre either creating your own or obtaining them from legitimate sources that allow sharing and downloading. Library Check if your local library offers eBook lending services. Many libraries have digital catalogs where you can borrow Samsung Np M60 Service Manual Repair Guide eBooks for free, including popular titles.Online Retailers: Websites like Amazon, Google Books, or Apple Books often sell eBooks. Sometimes, authors or publishers offer promotions or free periods for certain books.Authors Website Occasionally, authors provide excerpts or short stories for free on their websites. While this might not be the Samsung Np M60 Service

Manual Repair Guide full book , it can give you a taste of the authors writing style.Subscription Services Platforms like Kindle Unlimited or Scribd offer subscription-based access to a wide range of Samsung Np M60 Service Manual Repair Guide eBooks, including some popular titles.

FAQs About Samsung Np M60 Service Manual Repair Guide Books

What is a Samsung Np M60 Service Manual Repair Guide PDF? A PDF (Portable Document Format) is a file format developed by Adobe that preserves the layout and formatting of a document, regardless of the software, hardware, or operating system used to view or print it. **How do I create a Samsung Np M60 Service Manual Repair Guide PDF?** There are several ways to create a PDF: Use software like Adobe Acrobat, Microsoft Word, or Google Docs, which often have built-in PDF creation tools. Print to PDF: Many applications and operating systems have a "Print to PDF" option that allows you to save a document as a PDF file instead of printing it on paper. Online converters: There are various online tools that can convert different file types to PDF. **How do I edit a Samsung Np M60 Service Manual Repair Guide PDF?** Editing a PDF can be done with software like Adobe Acrobat, which allows direct editing of text, images, and other elements within the PDF. Some free tools, like PDFescape or Smallpdf, also offer basic editing capabilities. **How do I convert a Samsung Np M60 Service Manual Repair Guide PDF to another file format?** There are multiple ways to convert a PDF to another format: Use online converters like Smallpdf, Zamzar, or Adobe Acrobats export feature to convert PDFs to formats like Word, Excel, JPEG, etc. Software like Adobe Acrobat, Microsoft Word, or other PDF editors may have options to export or save PDFs in different formats. **How do I password-protect a Samsung Np M60 Service Manual Repair Guide PDF?** Most PDF editing software allows you to add password protection. In Adobe Acrobat, for instance, you can go to "File" -> "Properties" -> "Security" to set a password to restrict access or editing capabilities. Are there any free alternatives to Adobe Acrobat for working with PDFs? Yes, there are many free alternatives for working with PDFs, such as: LibreOffice: Offers PDF editing features. PDFsam: Allows splitting, merging, and editing PDFs. Foxit Reader: Provides basic PDF viewing and editing capabilities. How do I compress a PDF file? You can use online tools like Smallpdf, ILovePDF, or desktop software like Adobe Acrobat to compress PDF files without significant quality loss. Compression reduces the file size, making it easier to share and download. Can I fill out forms in a PDF file? Yes, most PDF viewers/editors like Adobe Acrobat, Preview (on Mac), or various online tools allow you to fill out forms in PDF files by selecting text fields and entering information. Are there any restrictions when working with PDFs? Some PDFs might have restrictions set by their creator, such as password protection, editing restrictions, or print restrictions. Breaking these restrictions might require specific software or tools, which may or may not be legal depending on the circumstances and local laws.

Find Samsung Np M60 Service Manual Repair Guide :

resonet sample papers with answer key
~~resource planning purpose statement report~~
respiratory webquest answer key
reteaching and practice unit 7 lesson 1
rester mince sans reacutegime
responsive ed answer key algerbra 1
restaurant sales training manual
restoring jordan english edition
retailing turnaround virtual business
reteaching 2 the pythagorean theorem answers
respiration bio 12 notes
retirement letter to school district
revers forward control diagram
review living environment 2nd edition hallman amsco
restaurant style steamed vegetables recipe

Samsung Np M60 Service Manual Repair Guide :

Owner Manuals | Bosch Home Appliances Learn the best operating tips as well as cleaning and care advice. Complete documentation is available for your Bosch appliance. Bosch Service Manuals If you are looking for all the Bosch Service Manuals, we've got you covered. Click to check all of them here! BOSCH - Dishwasher Repair Manual This Repair Manual is designed to assist you in the evaluation, diagnosis and repair of the current SHI, SHU and SHV model dishwasher series. To better ... User manual Bosch Logixx SGS0938 (English - 64 pages) Manual. View the manual for the Bosch Logixx SGS0938 here, for free. This manual comes under the category dishwashers and has been rated by 6 people with an ... User manual Bosch Logixx SGS0918 (72 pages) Manual. View the manual for the Bosch Logixx SGS0918 here, for free. This manual comes under the category dishwashers and has been rated by 2 people with an ... Bosch SPS40C12GB Repair Instructions - Dishwasher View and Download Bosch SPS40C12GB repair instructions online. SPS40C12GB dishwasher pdf manual download. Bosch LOGIXX 10 Manuals We have 2 BOSCH LOGIXX 10 manuals available for free PDF download: Operating, Care And Installation Instructions Manual, Installation And Instruction Manual ... List of Bosch Dishwasher Manuals and

Instructions Bosch dishwasher manuals and troubleshooting. The brand is often associated with home and business electric appliance with high quality and durability. Bosch Dishwasher Repair & Maintenance Tutorial 1 - YouTube Anyone have a workshop manual for a Bosch Logixx ... Mar 28, 2010 — Anyone have a workshop manual for a Bosch Logixx dishwasher SGS66 A02GB/20 - Answered by a verified UK Appliance Technician. Factory Repair FAQ PHONE: 877-732-8391(toll free) and ask for repair assistance. E-MAIL: repair@peavey.com. FAX: 601-486-1361. MAIL: PEAVEY SERVICE CENTER ... Support Find the authorized Peavey retailer or service center nearest you. Tech notes. Answers and advice on technical questions. Need amp repair Apr 12, 2020 — Need amp repair. This forum is for talking about all kinds of Peavey power amplifiers. ... Peavey factory repair. Do I need any return number assigned to it or ... Peavey Amp Repair Question Feb 28, 2010 — I disconnected the front control panel so that just the main power supply, preamp and amp are in the circuit and it still howls. Any ideas on ... Power Amplifier & Digital Sound Processor Repair We Repair All Rackmount Power Amplifiers. QSC. Mackie. Peavey. Pyle. Crown. Behringer. Alesis. Samson. Ashly. lab.gruppen. QSC Power Amp Repair. FAQ My Peavey product needs repair. What do I do now? If you need assistance finding a service center or dealer, you can use the Dealer/Service Center Locator here:. Warranty Repair Peavey Desert Amplifier Repair is an authorized service center for warranty repair work on all electronics and guitar amplifiers by Peavey. You can contact us by email ... Ford Taurus 3.0L 24v DOHC Intake Manifold Removal 1997 Mercury Sable 3.0L (Ford Taurus) - YouTube 2002 Taurus/Sable Duratec 3.0 Intake Disassembly - YouTube Upper Intake Manifold Removal | Taurus Car Club of America Jul 13, 2008 — I almost remove the UIM completely, but the things that are in the way are accelerator cable and cruise control cables. 00-07 Ford Taurus/Mercury Sable Intake Removal/Sparkplug ... Upper intake removal for 2004 mercury sable v6 DOHC intake manifold replacement Ford Taurus(so easy ... - YouTube Ford 3.5L DOHC Upper Intake manifold removal ... - YouTube help with intake manifold removal? - Ford Taurus Forum Jan 10, 2015 — Can't help you with the "cat claw" part. I usually use a small pry bar with a "V" cut out on each end. Looks like a small crow bar. As to "inch ... How to remove intake manifold on duratec engine on 1999 ... Aug 19, 2008 — Disconnect battery ground cable. Drain engine cooling system. Remove crankcase ventilation tube from valve cover and air cleaner outlet tube.