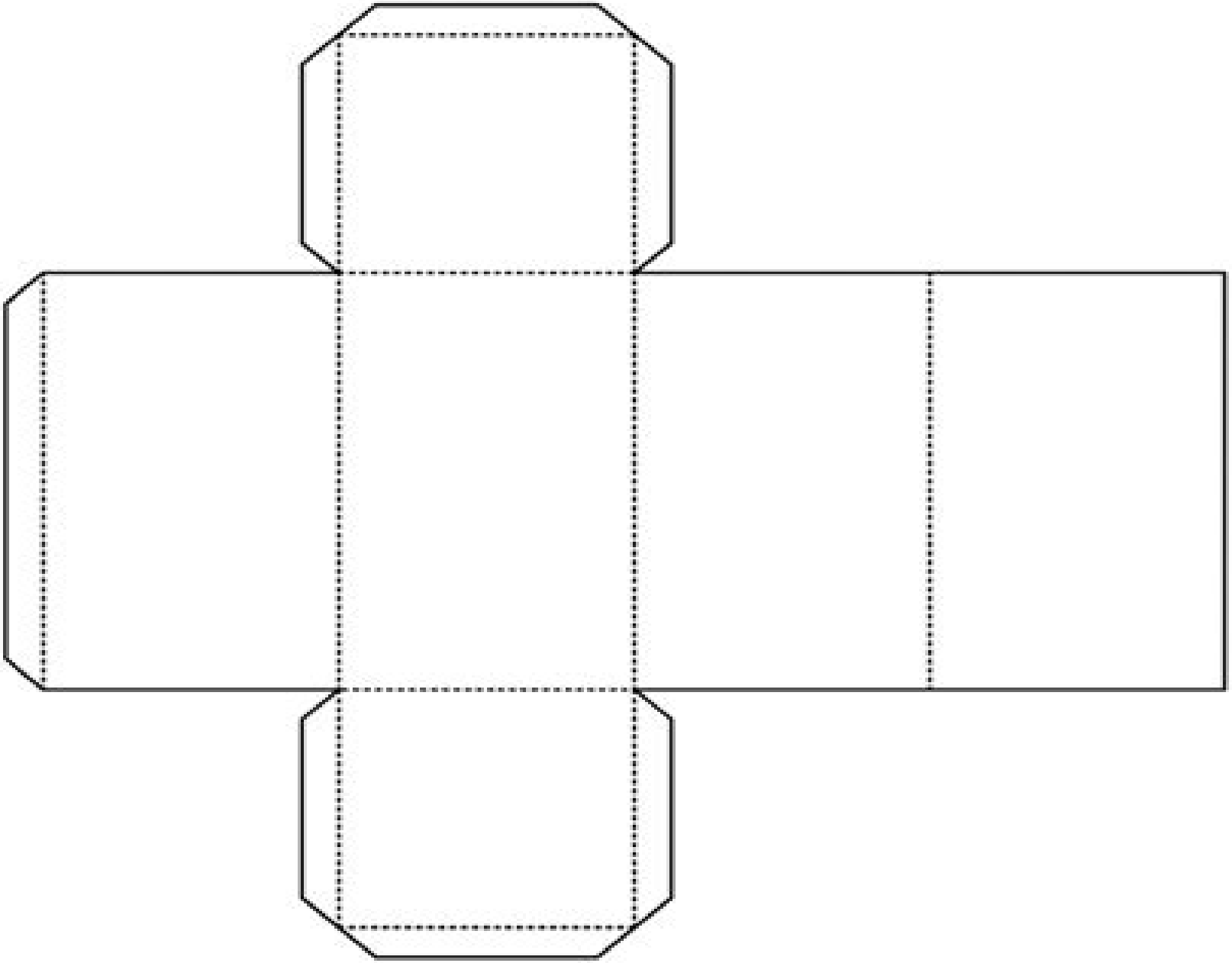

Rectangular Prism Centimeter Grid Net

Michael Brown

Rectangular Prism Centimeter Grid Net:

Sizing Up Measurement Ann Lawrence,Charlie Hennessy,2007 The lessons in Sizing Up Measurement Activities for Grades 6 8 Classrooms focus on concepts important to the middle school math curriculum including length area volume ratios and rates similarity and angles and often make connections among various measurement topics Each lesson is organized in an accessible easy to use format that includes an overview a list of materials a vocabulary list and step by step teaching directions Students come away from these lessons with a deeper understanding of why and how to measure and they develop the confidence required to make sense of any situation and the measurement tools involved pub desc **Math Expressions: Student activity book, vol. 1** ,2006 *Harcourt School Publishers Math* HSP,Harcourt School Publishers,2002-06 *Longman Active Maths 8* Khurana Rohit,2009-09 *Simple Steps for Sixth Grade* Thinking Kids,Carson-Dellosa Publishing,2015-12-14 Simple Steps for Sixth Grade helps your child master math and language arts skills such as fractions decimals ratios percents integers expressions equations geometry statistics grammar punctuation capitalization usage and sentence structure A standards based resource that simplifies key concepts for easy understanding Simple Steps for Sixth Grade provides learners with easy to follow units clear explanations skill reinforcing activities and an answer key to check accuracy By preparing students for today s rigorous academic standards this comprehensive resource is ideal for supporting classroom learning and enhancing home school curriculum A unique workbook series that offers step by step guidance Simple Steps breaks down essential concepts so that learners can develop a deep understanding of both math and ELA skills for improved academic performance With Simple Steps for Sixth Grade your child is one step closer to complete school success **The Math of Homes and Other Buildings** Hope Martin,Susan Guengerich,1999 20 real life activities show students that they really do use math every day and that can be fun Students learn how math is connected to their lives as they work through problems that also link them to other subjects such as science health education and consumer education As they solve problems together students develop self confidence in their math abilities Activities focus on home ownership construction and design financial aspects of ownership and the tallest of our structures skyscrapers Teacher pages include concepts materials needed procedures alternatives to traditional assessment and extension activities such as Internet Web sites Correlated to NCTM standards *Harcourt School Publishers Math Indiana* ,2002-11 **Intro to Geometry, Grades 7 - 8** ,2014-02-03 The 100 Series Intro to Geometry offers in depth practice and review for challenging middle school math topics such as angles and triangles graphing lines and area volume and surface area Common Core State Standards have raised expectations for math learning and many students in grades 6 8 are studying more accelerated math at younger ages As a result parents and students today have an increased need for at home math support The 100 Series provides the solution with titles that include over 100 targeted practice activities for learning algebra geometry and other advanced math topics It also features over 100 reproducible subject specific practice pages to support

standards based instruction Glencoe Mathematics Glencoe,1998-03 Motivate your students with relevant real world applications correlated Internet connections and additional skill practice in a variety of formats Reach all your students by balancing practice and skill development with hands on activities technology and projects and investigations Prepare students for success on standardized tests and in future math courses with a wide variety of assessment options and strong developmental links from arithmetic to algebra **New York Math: Math A** ,2000

Rectangular Prism Centimeter Grid Net Book Review: Unveiling the Power of Words

In some sort of driven by information and connectivity, the ability of words has become more evident than ever. They have the capacity to inspire, provoke, and ignite change. Such is the essence of the book **Rectangular Prism Centimeter Grid Net**, a literary masterpiece that delves deep into the significance of words and their effect on our lives. Compiled by a renowned author, this captivating work takes readers on a transformative journey, unraveling the secrets and potential behind every word. In this review, we shall explore the book is key themes, examine its writing style, and analyze its overall effect on readers.

https://crm.avenza.com/About/virtual-library/index.jsp/scott_air_pak_field_level_maintenance_manual.pdf

Table of Contents Rectangular Prism Centimeter Grid Net

1. Understanding the eBook Rectangular Prism Centimeter Grid Net
    - The Rise of Digital Reading Rectangular Prism Centimeter Grid Net
    - Advantages of eBooks Over Traditional Books
2. Identifying Rectangular Prism Centimeter Grid Net
    - Exploring Different Genres
    - Considering Fiction vs. Non-Fiction
    - Determining Your Reading Goals
3. Choosing the Right eBook Platform
    - Popular eBook Platforms
    - Features to Look for in an Rectangular Prism Centimeter Grid Net
    - User-Friendly Interface
4. Exploring eBook Recommendations from Rectangular Prism Centimeter Grid Net
    - Personalized Recommendations
    - Rectangular Prism Centimeter Grid Net User Reviews and Ratings
    - Rectangular Prism Centimeter Grid Net and Bestseller Lists

5. Accessing Rectangular Prism Centimeter Grid Net Free and Paid eBooks
    - Rectangular Prism Centimeter Grid Net Public Domain eBooks
    - Rectangular Prism Centimeter Grid Net eBook Subscription Services
    - Rectangular Prism Centimeter Grid Net Budget-Friendly Options
6. Navigating Rectangular Prism Centimeter Grid Net eBook Formats
    - ePub, PDF, MOBI, and More
    - Rectangular Prism Centimeter Grid Net Compatibility with Devices
    - Rectangular Prism Centimeter Grid Net Enhanced eBook Features
7. Enhancing Your Reading Experience
    - Adjustable Fonts and Text Sizes of Rectangular Prism Centimeter Grid Net
    - Highlighting and Note-Taking Rectangular Prism Centimeter Grid Net
    - Interactive Elements Rectangular Prism Centimeter Grid Net
8. Staying Engaged with Rectangular Prism Centimeter Grid Net
    - Joining Online Reading Communities
    - Participating in Virtual Book Clubs
    - Following Authors and Publishers Rectangular Prism Centimeter Grid Net
9. Balancing eBooks and Physical Books Rectangular Prism Centimeter Grid Net
    - Benefits of a Digital Library
    - Creating a Diverse Reading Collection Rectangular Prism Centimeter Grid Net
10. Overcoming Reading Challenges
    - Dealing with Digital Eye Strain
    - Minimizing Distractions
    - Managing Screen Time
11. Cultivating a Reading Routine Rectangular Prism Centimeter Grid Net
    - Setting Reading Goals Rectangular Prism Centimeter Grid Net
    - Carving Out Dedicated Reading Time
12. Sourcing Reliable Information of Rectangular Prism Centimeter Grid Net
    - Fact-Checking eBook Content of Rectangular Prism Centimeter Grid Net
    - Distinguishing Credible Sources
13. Promoting Lifelong Learning

- Utilizing eBooks for Skill Development
- Exploring Educational eBooks

14. Embracing eBook Trends
    - Integration of Multimedia Elements
    - Interactive and Gamified eBooks

Rectangular Prism Centimeter Grid Net Introduction

Rectangular Prism Centimeter Grid Net Offers over 60,000 free eBooks, including many classics that are in the public domain. Open Library: Provides access to over 1 million free eBooks, including classic literature and contemporary works. Rectangular Prism Centimeter Grid Net Offers a vast collection of books, some of which are available for free as PDF downloads, particularly older books in the public domain. Rectangular Prism Centimeter Grid Net : This website hosts a vast collection of scientific articles, books, and textbooks. While it operates in a legal gray area due to copyright issues, its a popular resource for finding various publications. Internet Archive for Rectangular Prism Centimeter Grid Net : Has an extensive collection of digital content, including books, articles, videos, and more. It has a massive library of free downloadable books. Free-eBooks Rectangular Prism Centimeter Grid Net Offers a diverse range of free eBooks across various genres. Rectangular Prism Centimeter Grid Net Focuses mainly on educational books, textbooks, and business books. It offers free PDF downloads for educational purposes. Rectangular Prism Centimeter Grid Net Provides a large selection of free eBooks in different genres, which are available for download in various formats, including PDF. Finding specific Rectangular Prism Centimeter Grid Net, especially related to Rectangular Prism Centimeter Grid Net, might be challenging as theyre often artistic creations rather than practical blueprints. However, you can explore the following steps to search for or create your own Online Searches: Look for websites, forums, or blogs dedicated to Rectangular Prism Centimeter Grid Net, Sometimes enthusiasts share their designs or concepts in PDF format. Books and Magazines Some Rectangular Prism Centimeter Grid Net books or magazines might include. Look for these in online stores or libraries. Remember that while Rectangular Prism Centimeter Grid Net, sharing copyrighted material without permission is not legal. Always ensure youre either creating your own or obtaining them from legitimate sources that allow sharing and downloading. Library Check if your local library offers eBook lending services. Many libraries have digital catalogs where you can borrow Rectangular Prism Centimeter Grid Net eBooks for free, including popular titles.Online Retailers: Websites like Amazon, Google Books, or Apple Books often sell eBooks. Sometimes, authors or publishers offer promotions or free periods for certain books.Authors Website Occasionally, authors provide excerpts or short stories for free on their websites. While this might not be the Rectangular Prism Centimeter Grid Net full book , it can give you a taste of the authors writing style.Subscription Services

Platforms like Kindle Unlimited or Scribd offer subscription-based access to a wide range of Rectangular Prism Centimeter Grid Net eBooks, including some popular titles.

FAQs About Rectangular Prism Centimeter Grid Net Books

How do I know which eBook platform is the best for me? Finding the best eBook platform depends on your reading preferences and device compatibility. Research different platforms, read user reviews, and explore their features before making a choice. Are free eBooks of good quality? Yes, many reputable platforms offer high-quality free eBooks, including classics and public domain works. However, make sure to verify the source to ensure the eBook credibility. Can I read eBooks without an eReader? Absolutely! Most eBook platforms offer webbased readers or mobile apps that allow you to read eBooks on your computer, tablet, or smartphone. How do I avoid digital eye strain while reading eBooks? To prevent digital eye strain, take regular breaks, adjust the font size and background color, and ensure proper lighting while reading eBooks. What the advantage of interactive eBooks? Interactive eBooks incorporate multimedia elements, quizzes, and activities, enhancing the reader engagement and providing a more immersive learning experience. Rectangular Prism Centimeter Grid Net is one of the best book in our library for free trial. We provide copy of Rectangular Prism Centimeter Grid Net in digital format, so the resources that you find are reliable. There are also many Ebooks of related with Rectangular Prism Centimeter Grid Net. Where to download Rectangular Prism Centimeter Grid Net online for free? Are you looking for Rectangular Prism Centimeter Grid Net PDF? This is definitely going to save you time and cash in something you should think about. If you trying to find then search around for online. Without a doubt there are numerous these available and many of them have the freedom. However without doubt you receive whatever you purchase. An alternate way to get ideas is always to check another Rectangular Prism Centimeter Grid Net. This method for see exactly what may be included and adopt these ideas to your book. This site will almost certainly help you save time and effort, money and stress. If you are looking for free books then you really should consider finding to assist you try this. Several of Rectangular Prism Centimeter Grid Net are for sale to free while some are payable. If you arent sure if the books you would like to download works with for usage along with your computer, it is possible to download free trials. The free guides make it easy for someone to free access online library for download books to your device. You can get free download on free trial for lots of books categories. Our library is the biggest of these that have literally hundreds of thousands of different products categories represented. You will also see that there are specific sites catered to different product types or categories, brands or niches related with Rectangular Prism Centimeter Grid Net. So depending on what exactly you are searching, you will be able to choose e books to suit your own need. Need to access completely for Campbell Biology Seventh Edition book? Access Ebook without any digging. And by

having access to our ebook online or by storing it on your computer, you have convenient answers with Rectangular Prism Centimeter Grid Net To get started finding Rectangular Prism Centimeter Grid Net, you are right to find our website which has a comprehensive collection of books online. Our library is the biggest of these that have literally hundreds of thousands of different products represented. You will also see that there are specific sites catered to different categories or niches related with Rectangular Prism Centimeter Grid Net So depending on what exactly you are searching, you will be able tochoose ebook to suit your own need. Thank you for reading Rectangular Prism Centimeter Grid Net. Maybe you have knowledge that, people have search numerous times for their favorite readings like this Rectangular Prism Centimeter Grid Net, but end up in harmful downloads. Rather than reading a good book with a cup of coffee in the afternoon, instead they juggled with some harmful bugs inside their laptop. Rectangular Prism Centimeter Grid Net is available in our book collection an online access to it is set as public so you can download it instantly. Our digital library spans in multiple locations, allowing you to get the most less latency time to download any of our books like this one. Merely said, Rectangular Prism Centimeter Grid Net is universally compatible with any devices to read.

Find Rectangular Prism Centimeter Grid Net :

scott air pak field level maintenance manual
scope of agriculture p1 final exam
scott foresman science grade 4 chapter 2 test
~~score sheet template afl~~
scotts classic reel mower handle replacement
scope of maths literacy of september grd 10
scota owners manual
scoring guides and rubrics
~~scope grade 1november 2014~~
scotts mower service manual
scotts lawn mower 25 hp manual
scope english exam paper
scott bonnar queen mowers manual
scope for physics paper grade 11
scotts edger manual

Rectangular Prism Centimeter Grid Net :

599f whole grade student acceleration form fridley middle - Feb 09 2023
web iowa acceleration scale whole grade acceleration referral form section i general information part a student information student name student address student phone current school name current school address student gender current grade proposed grade for acceleration

teacher questionnaire supporting the iowa acceleration scale - Apr 30 2022
web supporting the iowa acceleration scale date 2 pps tag march2017 school and academic factors 1 grade placement under consideration check only one acceleration would result in a change in the building at the beginning of the first semester of the academic year in this case a plan for transition is needed

acceleration institute - Dec 07 2022
web published by great potential press the iowa acceleration scale 3rd edition is a tool to help schools make effective decisions regarding a grade skip it is designed to take personal bias out of the decision making process when considering a child for

acceleration information sheet for educators approved - Mar 30 2022
web one method to explore a child s suitability for grade acceleration is the iowa acceleration scale ronksley pavia 2011 if a grade skip is recommended the student s teachers and parents need to dedicate time to support a smooth transition successful acceleration relies upon collaboration between school home and student

acceleration handbook wlake org - Aug 03 2022
web acceleration options early entrance to kindergarten moves a child into kindergarten whole grade acceleration moves a child to a higher grade level for all classes single subject acceleration moves a child to a higher grade level in one subject area early graduation student meets graduation requirements

gifted and talented iowa department of education - May 12 2023
web iowa acceleration scale 3rd edition a tool to help schools make effective decisions regarding a grade skip the ias guides a child study team including educators teachers parents and other professionals through a discussion of the academic and social characteristics of the student

iowaaccelerationscale3rdeditionform download only - Dec 27 2021
web iowaaccelerationscale3rdeditionform 1 iowaaccelerationscale3rdeditionfor m iowaaccelerationscale3rdeditionform downloaded from lisansustu altinbas edu tr

iowa acceleration scale 3rd edition gifted unlimited llc - Oct 05 2022
web designed to take personal bias out of the decision making process when considering a child for whole grade acceleration

the ias requires assessment information test and other data and utilizes a child study team format to come to agreement on a series of assessment questions related to the child s motivation school attendance relationships

guidelines for the acceleration of students pre primary year 10 - Sep 04 2022

web the iowa acceleration scale is a helpful resource which has an accompanying manual assouline colangelo lupkowski shoplik lipscomb 1999 the iowa acceleration scale includes a framework to assess a student s social readiness for acceleration which a school may find useful

amazon web services - Jan 28 2022

web for the iowa acceleration scale an individual ability test i e intelligence or iq is strongly recommended because it yields the most reliable and valid measure of general ability the most current version of a wechsler or binet scale is recommended as a reliable and valid indicator of a student s potential to be successful in a school setting

iowa acceleration scale 3rd edition manual google books - Jun 13 2023

web developed and tested by the belin blank center at the university of iowa the ias ensures that acceleration decisions are systematic thoughtful well reasoned and defensible the ias continues to be used in all 50 states australia and canada

iowa acceleration scale manual a guide for whole grade acceleration - Feb 26 2022

web acceleration that might be most appropriate for a given child sue says talking all things gifted and some things not richard frank lavi rated it liked it dec 25 the iowa acceleration scale 3 rd edition is a tool to help schools make effective decisions regarding a grade skip my personal

iowa acceleration scale ias a guide for whole grade weebly - Jul 02 2022

web book review davidson institute the iowa acceleration scale is a tool to help educators and or parents determine if grade acceleration is an appropriate option for a particular student it also provides a basis for interactions between parents and teachers on the subject reviewed by the davidson institute for talent development

iowa acceleration scale manual 3rd edition amazon com - Nov 06 2022

web feb 1 2009 developed and tested by the belin blank center at the university of iowa the ias ensures that acceleration decisions are systematic thoughtful well reasoned and defensible new for 3rd edition refined overall based on experience and research presented in clearer format to make it easier to use clarifies scoring of items

an introduction to the iowa acceleration scale ohio department - Jul 14 2023

web the iowa acceleration scale ias now in its third edition is used by schools in all 50 states as well as australia canada and new zealand the ias has ten sections and it takes all kinds of factors into account like the age of the child the offerings of the school and whether a sibling will be in the same grade

iowa acceleration scale pdf document - Apr 11 2023

web apr 27 2015 this guidance tool now known as the iowa acceleration scale ias has proven itself as a systematic and defensible way to generate recommendations and guidelines for whole grade acceleration the iowa acceleration scale ias now in its second edition is used by schools in all 50 states as well as australia canada and new

iowa acceleration scale hoagies kids teens - Jan 08 2023

web iowa acceleration scale a guide for whole grade acceleration k 8 a book review on this research based guide to acceleration decisions for schools and parents shop amazon and support hoagies page

acceleration johnston community school district - Jun 01 2022

web resource iowa acceleration scale belin blank international center for gifted education and talent development procedures for grade level acceleration initiation of acceleration is usually from a teacher or parent interested parties should contact the building level elp teacher who will notify the elp coordinator and building administrator

iowa acceleration scale manual a guide for whole grade acceleration - Mar 10 2023

web jan 1 2009 iowa acceleration scale manual a guide for whole grade acceleration k 8 3rd edition manual january 2009 authors susan g assouline university of iowa nicholas colangelo university of

iowa acceleration scale - Aug 15 2023

web the iowa acceleration scale 3rd edition is a paper based guide to help schools make effective decisions regarding a grade skip the ias provides a more objective look at the student an analysis of the major factors to be considered in making a decision guidelines for weighting the relative importance of the major factors

shiva speaks conversations with maha avatar babaji by - May 17 2022

web sep 28 2023 radiant shiva speaks conversations with maha avatar babaji march 24th 2020 scopri shiva speaks conversations with maha avatar babaji di khilnani rashmi spedizione gratuita per i clienti prime e per ordini a partire da 29 spediti da shiva speaks conversations with maha avatar babaji ebook iet donnu edu ua 2 6

shiva speaks conversations with maha avatar babaj - Apr 15 2022

web as insight of this shiva speaks conversations with maha avatar babaj can be taken as with ease as picked to act the unknown life of jesus christ nicolas notovitch 1894 breath inside partha gupta 2017 06 11 life is functioning in us as breath as such that which is alive is breathing every breath is certain frequency in fact all

shiva speaks conversations with maha avatar babaji ebook - Feb 23 2023

web apr 25 2013 shiva speaks conversations with maha avatar babaji ebook khilnani rashmi amazon ca kindle store

shiva speaks conversations with maha avatar babaji by - Jul 19 2022

web shiva speaks conversations with maha avatar babaji by rashmi khilnani speaks the healing of the human heart she is an international teacher of usui tibetan karuna r raku kei and original 7 degree reiki master teachers and practitioners

shiva speaks conversations with maha avatar babaji kindle - Jan 25 2023
web apr 25 2013 shiva speaks conversations with maha avatar babaji ebook khilnani rashmi amazon co uk kindle store
shiva speaks conversations with maha avatar babaji - Jul 31 2023
web by rashmi khilnani author format kindle edition 4 4 38 ratings see all formats and editions babaji the ageless avatar who taught jesus and moses and who as shiva is the lord of the universe speaks to us through his devotee the indian mystic rashmi who shares with us both her journey with this supreme master and his wisdom teachings
shiva speaks conversations with maha avatar babaji - Nov 22 2022
web książka shiva speaks conversations with maha avatar babaji autorstwa khilnani rashmi dostępna w sklepie empik com w cenie 93 27 zł przeczytaj recenzję shiva speaks conversations with maha avatar babaji zamów dostawę do dowolnego salonu i zapłać przy odbiorze
amazon com customer reviews shiva speaks conversations with maha - Dec 24 2022
web find helpful customer reviews and review ratings for shiva speaks conversations with maha avatar babaji at amazon com read honest and unbiased product reviews from our users
shiva speaks conversations with maha avatar babaj 2022 - Feb 11 2022
web kingdom of shiva life code 7 yearly forecast for 2012 sanathana sarathi english volume 05 2000 to 2010 the oxford handbook of feminist theology shiva speaks conversations with maha avatar babaj downloaded from careersatdot com by guest gael montgomery the divine mother speaks all india radio air new delhi
shiva speaks conversations with maha avatar babaji by - Mar 27 2023
web find many great new used options and get the best deals for shiva speaks conversations with maha avatar babaji by rashmi khilnani 2014 trade paperback at the best online prices at ebay free shipping for many products
shiva speaks conversations with maha avatar babaji alibris - Apr 27 2023
web buy shiva speaks conversations with maha avatar babaji by rashmi khilnani online at alibris we have new and used copies available in 1 editions starting at 17 41 shop now
shiva speaks conversations with maha avatar babaji - Oct 02 2023
web babaji the ageless avatar who taught jesus and moses and who as shiva is the lord of the universe speaks to us through his devotee the indian mystic rashmi who shares with us both her journey with this supreme master and his wisdom teachings for the modern age
shiva speaks conversations with maha avatar babaji by - Jun 17 2022
web may 28 2023 shiva speaks conversations with maha avatar babaji by rashmi khilnani is accessible in our publication gathering an online secure4 khronos org 1 7 shiva speaks conversations with maha avatar babaji by rashmi khilnani access to

it is set as public so you can get it swiftly it is your absolutely own get older to demonstrate

shiva speaks conversations with maha avatar babaji goodreads - Jun 29 2023

web babaji the ageless avatar who taught jesus and moses and who as shiva is the lord of the universe speaks to us through his devotee the indian mystic rashmi who shares with us both her journey with this supreme master and his wisdom teachings for the modern age

shiva speaks conversations withmaha avatar babaji goodreads - Sep 01 2023

web jan 1 2013 shiva speaks conversations withmaha avatar babaji by rashmi khilnani goodreads jump to ratings and reviews want to read kindle 7 99 rate this book shiva speaks conversations withmaha avatar babaji rashmi khilnani 4 40 5 ratings1 review spiritual guidance book 126 pages paperback first published january 1 2013

shiva speaks conversations with maha avatar babaji by - Mar 15 2022

web jun 8 2023 shiva speaks conversations with maha avatar babaji by rashmi khilnani the ageless avatar who taught jesus and moses and who as shiva is the lord of the universe speaks to us through his devotee the indian mystic rashmi who shares

shiva speaks conversations with maha avatar babaji mystic - Aug 20 2022

web shiva speaks conversations with maha avatar babaji by rashmi khilnani rashmi khilnani chapter one b aba j i the g uru of g urus yes the same babaji from yogananda s an autobiography of a yogi yet how do you define the indefinable limitless incarnation of divine energy in a human body it is impossible

shiva speaks conversations with maha avatar babaji - May 29 2023

web babaji the ageless avatar who taught jesus and moses and who as shiva is the lord of the universe speaks to us through his devotee the indian mystic rashmi who shares with us both her journey with this supreme master and his wisdom teachings for the modern age

shiva speaks conversations with maha avatar babaj pdf ncf - Oct 22 2022

web shiva speaks conversations with maha avatar babaj downloaded from ncf ec2 west 02 xconvert com by guest corinne harrison voices of the sacred feminine srv associations he encompasses all things though he is but one whoever should know him shiva the benign wins peaces forever svetashvatara upanishad 1v 14 babaji

conversations with mahavatar babaji true pdf dokumen pub - Sep 20 2022

web jul 10 2019 i am an incarnation of his beloved snake vasuki i am the avatar of vasuki who is the very part of shiva himself this is the major reason why people on earth who have seen me or 88 the belief energy had experiences with me feel impossible to achieve what i have and find it unusual

tos h expo 2022 başvuruları başladı - Sep 23 2021

oecd series on testing and assessment oecd ilibrary - Jun 01 2022
web good laboratory practice glp the mutual acceptance of data mad system the oecd principles of good laboratory practice glp ensure the generation of high quality and
guidance document on an integrated approach on testing and - Aug 23 2021

environmental health and strengthening resilience to - Feb 09 2023
web oecd work on environment helps countries design and implement effective policies to address environmental problems and sustainably manage natural resources it
environment directorate oecd - Jun 13 2023
web the chemical safety and biosafety progress report is released every eight months its purpose is to provide an update on the projects events and activities information on
environment directorate joint meeting of the - Jan 28 2022
web apr 4 2022 duyuru tarihi 04 04 2022 14 17 mayıs 2022 tarihleri arasında İstanbul da düzenlenen ve kosgeb tarafından uluslararası fuar olarak desteklenen tos h expo
tos h expo 2022 4 türk İş güvenliği ve sağlığı fuarı - Oct 25 2021
web apr 13 2017 this guidance document proposes an integrated approach on testing and assessment iata for skin corrosion and irritation it also provides consistent information
chemical safety and biosafety publications and - Apr 11 2023
web environment health safety news no 22 july 2008 introduction the environment health and safety news is issued approximately every eight months between the
organisation of the environment health and safety - Jul 14 2023
web latest documents focus outcomes environment ministerial global plastics outlook oecd international programme for action on climate ipac 30 31 march 2022 read
emission scenario documents oecd - Aug 03 2022
web apr 13 2018 oecd series on testing and assessment this series includes publications related to testing and assessment of chemicals some of them support the development
environment health safety news organisation for economic - Oct 05 2022
web esds aim to quantify the emissions of a chemical into water air soil and or solid waste developed as a joint project with oecd biocides programme further reading
environment health safety news pdf organisation - Mar 10 2023

web apr 21 2020 the covid 19 crisis has clearly demonstrated that societies need to strengthen their resilience to pandemics and other emergencies countries are

environment oecd - Jan 08 2023

web the policy choices governments make today will determine their success in building a transition to a greener more inclusive and more resilient tomorrow it is an opportunity to

chemical safety and biosafety oecd - Aug 15 2023

web the chemical legislation indicator allows you to explore the legal frameworks set up by each country to protect human health and the environment oecd work on chemical safety and biosafety 2021 24 this brochure provides an overview of ongoing and

series on testing and assessment publications by number - Apr 30 2022

web sep 11 2023 with four months of 2023 still left the us has set a record for the most natural disasters in a single year that have cost 1bn or more as fires floods and

tos h expo 2022 İstanbul sanayi odası İş sağlığı ve - Nov 25 2021

web yeni kurulan firmalar ve kâr amacı gütmeyen kuruluşlar için özel bölüm messe düsseldorf gmbh ve yerel ortağı tezulaş fuar 14 17 mayıs 2022 tarihleri arasında İstanbul da

environmental health world health organization who - Sep 04 2022

web jun 9 2016 unless more stringent policies are adopted findings point to a significant increase in global emissions and concentrations of air pollutants with severe impacts on

the economic consequences of outdoor air pollution en oecd - Jul 02 2022

web this series includes publications related to testing and assessment of chemicals some of them support the development of oecd test guidelines e g validation reports

chemical safety and biosafety progress report oecd - May 12 2023

web engage with us stay tuned on twitter oecd en v for more information please contact ehs contact oecd org to receive our latest chemical safety and biosafety

environmental health economic analysis national - Nov 06 2022

web sep 5 2023 latest publications all 22 august 2023 who global water sanitation and hygiene annual report 2022 download read more 28 june 2023 burden of disease

us sets new record for billion dollar climate disasters in single - Feb 26 2022

web oct 24 2022 the 2022 european week for safety and health at work will be again raising awareness about the healthy workplaces campaign 20 22 running since

osh events european agency for safety and health at work - Dec 27 2021
web mar 22 2022 İstanbul sanayi odası tos h expo 2022 ye sadece uzmanlığı ve sanayi bağlantıları ile katkıda bulunmakla kalmayıp aynı zamanda 14 17 mayıs tarihleri
oecd building a resilient recovery how we can emerge - Dec 07 2022
web environment health safety news organisation for economic national 4 h club news dec 24 2019 california safety news sep 13 2021 one year on jul 23 2022
good laboratory practice glp oecd - Mar 30 2022
web aug 8 2020 organisation for economic co operation and development 24 jul 2008 english or english environment directorate joint meeting of the