MODEL 534 FB

NAMES OF PARTS

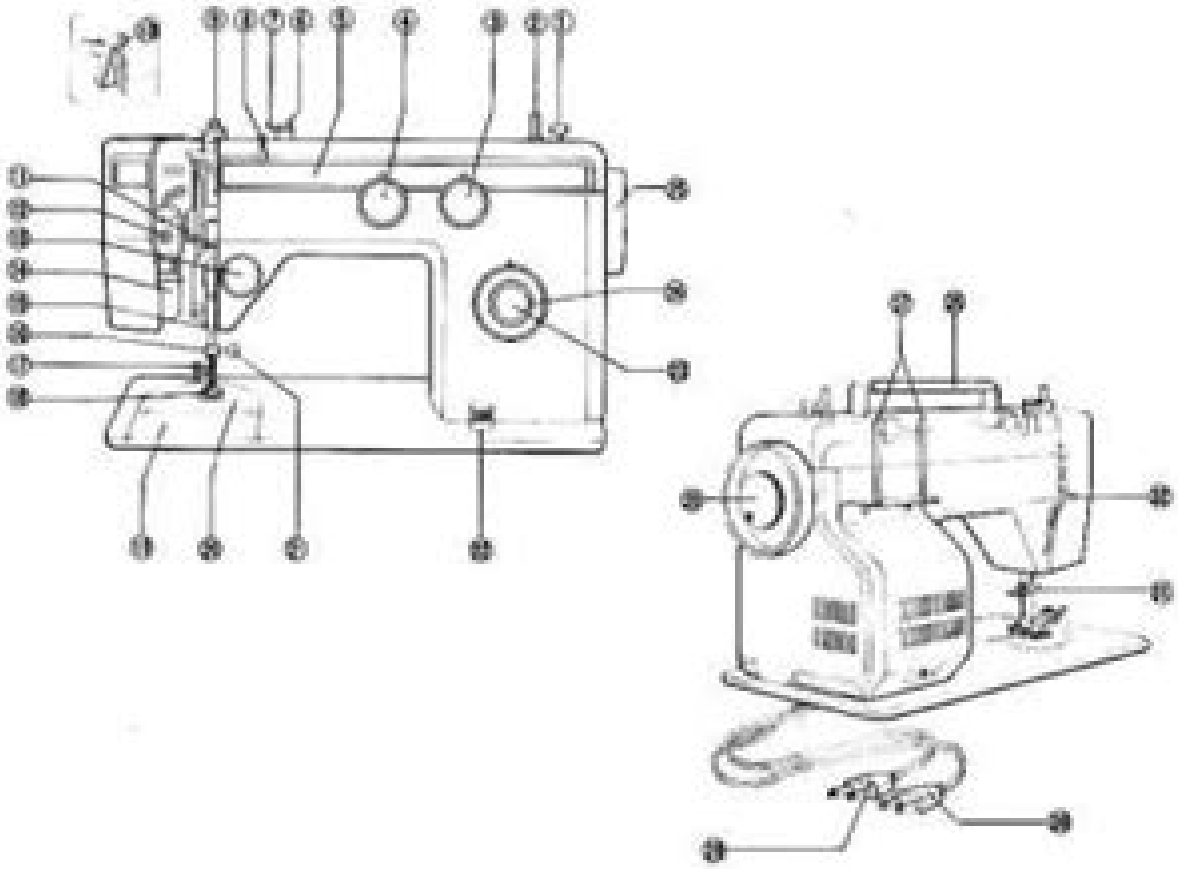

1. Bobbin Winder Stop
2. Bobbin Winder Spindle
3. Stitch Width/Buttonholer Knob
4. Pattern Selector Knob
5. Pattern Chart
6. Bobbin Winder Tension Disc
7. Rear Thread Guide
8. Front Thread Guide
9. Pressure Regulator
10. Thread Take-Up Lever
11. Upper Thread Guide
12. Sewing Light Switch
13. Upper Thread Tension Regulator
14. Sewing Light Bulb
15. Lower Thread Guide
16. Needle Bar Thread Guide
17. Presser Foot Thumb Screw
18. Presser Foot
19. Hinged Cover Plate
20. Needle Plate
21. Needle Clamp Screw
22. Drop-Feed Knob
23. Reverse Stitch Button
24. Stitch Length Knob
25. Hand Wheel
26. Handle
27. Spool Pin
28. Stop Motion Knob
29. Light Plug
30. Motor Plug
31. Thread Cutter
32. Presser Foot Lifter

Downloaded from Manualshelf.com

Necchi 534fb Sewing Machine Manual

Zhe Xu

Necchi 534fb Sewing Machine Manual:

Unveiling the Power of Verbal Art: An Emotional Sojourn through **Necchi 534fb Sewing Machine Manual**

In a world inundated with displays and the cacophony of instant conversation, the profound power and psychological resonance of verbal artistry often diminish into obscurity, eclipsed by the constant assault of sound and distractions. Yet, located within the lyrical pages of **Necchi 534fb Sewing Machine Manual**, a charming perform of fictional brilliance that impulses with organic emotions, lies an unique trip waiting to be embarked upon. Written with a virtuoso wordsmith, this enchanting opus guides viewers on an emotional odyssey, gently revealing the latent potential and profound affect stuck within the complicated internet of language. Within the heart-wrenching expanse of the evocative analysis, we can embark upon an introspective exploration of the book is key subjects, dissect their captivating publishing design, and immerse ourselves in the indelible effect it leaves upon the depths of readers souls.

https://crm.avenza.com/book/book-search/fetch.php/pearl_harbor_attack_dbq_answer_sheet.pdf

Table of Contents Necchi 534fb Sewing Machine Manual

1. Understanding the eBook Necchi 534fb Sewing Machine Manual
    - The Rise of Digital Reading Necchi 534fb Sewing Machine Manual
    - Advantages of eBooks Over Traditional Books
2. Identifying Necchi 534fb Sewing Machine Manual
    - Exploring Different Genres
    - Considering Fiction vs. Non-Fiction
    - Determining Your Reading Goals
3. Choosing the Right eBook Platform
    - Popular eBook Platforms
    - Features to Look for in an Necchi 534fb Sewing Machine Manual
    - User-Friendly Interface
4. Exploring eBook Recommendations from Necchi 534fb Sewing Machine Manual
    - Personalized Recommendations

    - Necchi 534fb Sewing Machine Manual User Reviews and Ratings
    - Necchi 534fb Sewing Machine Manual and Bestseller Lists
5. Accessing Necchi 534fb Sewing Machine Manual Free and Paid eBooks
    - Necchi 534fb Sewing Machine Manual Public Domain eBooks
    - Necchi 534fb Sewing Machine Manual eBook Subscription Services
    - Necchi 534fb Sewing Machine Manual Budget-Friendly Options
6. Navigating Necchi 534fb Sewing Machine Manual eBook Formats
    - ePub, PDF, MOBI, and More
    - Necchi 534fb Sewing Machine Manual Compatibility with Devices
    - Necchi 534fb Sewing Machine Manual Enhanced eBook Features
7. Enhancing Your Reading Experience
    - Adjustable Fonts and Text Sizes of Necchi 534fb Sewing Machine Manual
    - Highlighting and Note-Taking Necchi 534fb Sewing Machine Manual
    - Interactive Elements Necchi 534fb Sewing Machine Manual
8. Staying Engaged with Necchi 534fb Sewing Machine Manual
    - Joining Online Reading Communities
    - Participating in Virtual Book Clubs
    - Following Authors and Publishers Necchi 534fb Sewing Machine Manual
9. Balancing eBooks and Physical Books Necchi 534fb Sewing Machine Manual
    - Benefits of a Digital Library
    - Creating a Diverse Reading Collection Necchi 534fb Sewing Machine Manual
10. Overcoming Reading Challenges
    - Dealing with Digital Eye Strain
    - Minimizing Distractions
    - Managing Screen Time
11. Cultivating a Reading Routine Necchi 534fb Sewing Machine Manual
    - Setting Reading Goals Necchi 534fb Sewing Machine Manual
    - Carving Out Dedicated Reading Time
12. Sourcing Reliable Information of Necchi 534fb Sewing Machine Manual
    - Fact-Checking eBook Content of Necchi 534fb Sewing Machine Manual

    - Distinguishing Credible Sources
13. Promoting Lifelong Learning
    - Utilizing eBooks for Skill Development
    - Exploring Educational eBooks
14. Embracing eBook Trends
    - Integration of Multimedia Elements
    - Interactive and Gamified eBooks

Necchi 534fb Sewing Machine Manual Introduction

In this digital age, the convenience of accessing information at our fingertips has become a necessity. Whether its research papers, eBooks, or user manuals, PDF files have become the preferred format for sharing and reading documents. However, the cost associated with purchasing PDF files can sometimes be a barrier for many individuals and organizations. Thankfully, there are numerous websites and platforms that allow users to download free PDF files legally. In this article, we will explore some of the best platforms to download free PDFs. One of the most popular platforms to download free PDF files is Project Gutenberg. This online library offers over 60,000 free eBooks that are in the public domain. From classic literature to historical documents, Project Gutenberg provides a wide range of PDF files that can be downloaded and enjoyed on various devices. The website is user-friendly and allows users to search for specific titles or browse through different categories. Another reliable platform for downloading Necchi 534fb Sewing Machine Manual free PDF files is Open Library. With its vast collection of over 1 million eBooks, Open Library has something for every reader. The website offers a seamless experience by providing options to borrow or download PDF files. Users simply need to create a free account to access this treasure trove of knowledge. Open Library also allows users to contribute by uploading and sharing their own PDF files, making it a collaborative platform for book enthusiasts. For those interested in academic resources, there are websites dedicated to providing free PDFs of research papers and scientific articles. One such website is Academia.edu, which allows researchers and scholars to share their work with a global audience. Users can download PDF files of research papers, theses, and dissertations covering a wide range of subjects. Academia.edu also provides a platform for discussions and networking within the academic community. When it comes to downloading Necchi 534fb Sewing Machine Manual free PDF files of magazines, brochures, and catalogs, Issuu is a popular choice. This digital publishing platform hosts a vast collection of publications from around the world. Users can search for specific titles or explore various categories and genres. Issuu offers a seamless reading experience with its user-friendly interface and allows users to download PDF files for offline reading. Apart from dedicated platforms, search engines also play a crucial role in finding free PDF files. Google, for instance, has an advanced

search feature that allows users to filter results by file type. By specifying the file type as "PDF," users can find websites that offer free PDF downloads on a specific topic. While downloading Necchi 534fb Sewing Machine Manual free PDF files is convenient, its important to note that copyright laws must be respected. Always ensure that the PDF files you download are legally available for free. Many authors and publishers voluntarily provide free PDF versions of their work, but its essential to be cautious and verify the authenticity of the source before downloading Necchi 534fb Sewing Machine Manual. In conclusion, the internet offers numerous platforms and websites that allow users to download free PDF files legally. Whether its classic literature, research papers, or magazines, there is something for everyone. The platforms mentioned in this article, such as Project Gutenberg, Open Library, Academia.edu, and Issuu, provide access to a vast collection of PDF files. However, users should always be cautious and verify the legality of the source before downloading Necchi 534fb Sewing Machine Manual any PDF files. With these platforms, the world of PDF downloads is just a click away.

FAQs About Necchi 534fb Sewing Machine Manual Books

How do I know which eBook platform is the best for me? Finding the best eBook platform depends on your reading preferences and device compatibility. Research different platforms, read user reviews, and explore their features before making a choice. Are free eBooks of good quality? Yes, many reputable platforms offer high-quality free eBooks, including classics and public domain works. However, make sure to verify the source to ensure the eBook credibility. Can I read eBooks without an eReader? Absolutely! Most eBook platforms offer web-based readers or mobile apps that allow you to read eBooks on your computer, tablet, or smartphone. How do I avoid digital eye strain while reading eBooks? To prevent digital eye strain, take regular breaks, adjust the font size and background color, and ensure proper lighting while reading eBooks. What the advantage of interactive eBooks? Interactive eBooks incorporate multimedia elements, quizzes, and activities, enhancing the reader engagement and providing a more immersive learning experience. Necchi 534fb Sewing Machine Manual is one of the best book in our library for free trial. We provide copy of Necchi 534fb Sewing Machine Manual in digital format, so the resources that you find are reliable. There are also many Ebooks of related with Necchi 534fb Sewing Machine Manual. Where to download Necchi 534fb Sewing Machine Manual online for free? Are you looking for Necchi 534fb Sewing Machine Manual PDF? This is definitely going to save you time and cash in something you should think about.

Find Necchi 534fb Sewing Machine Manual :

pearl harbor attack dbq answer sheet

pearson education chemistry guided practice problems
peanut butter cookie recipe 3
peaches monroe trilogy complete boxed set english edition
pear sweet potato recipe
pearson education algebra chapter8
pearson american government study guide
pearson mymathlab answer key intermediate algebra
pearson chemistry 12th edition practice exams
pearson chemistry workbook answers ch 9
pearson education chemistry packet answers
pearson algebra common core answers
~~pearson bio 101 lab manual~~
pearson education topic 8 test math
pearson education math page 82

Necchi 534fb Sewing Machine Manual :

clinical science subject exams nbme - Sep 22 2023
web purchase vouchers for self assessments from the clinical mastery series to support students practicing and evaluating their readiness for a clinical science subject exam learn more customized assessment services
clinical mastery series nbme - Oct 23 2023
web overview self assessments from the clinical mastery series are designed for students taking an nbme clinical science subject exam they feature multiple choice questions on clinical science content typically covered during a clerkship or medical education course
comprehensive clinical science self assessment nbme - Apr 17 2023
web nbme self assessment insights is a new interactive tool designed to give you a clearer picture of your performance and readiness for the usmle or a clinical science subject exam sort filter and compare your self assessment results for
nbme clinical sciences comprehensive exam ccse msc - Dec 13 2022
web the comprehensive clinical science exam ccse follows sometime between the third and fourth year during clinical rotations and is representative of step2 performance this clinical sciences comprehensive nbme exam tests the same content and follows the same score as the usmle step2ck exam there are 200 questions broken into 4

learning through self assessment investigating the relationship - Oct 11 2022
web oct 28 2016 the nbme clinical science mastery series csms are web administered self assessments built to the same content specifications as the nbme clinical science subject examinations that
impact of the introduction of the clinical science mastery series - Nov 12 2022
web while the nbme clinical science mastery series csms existed for all other clinical subjects family medicine csms self assessments were first introduced in september 2017 the csms self assessments consist of examination questions that were previously part of the nbme examinations
assess and learn portfolio nbme - Jun 19 2023
web comprehensive clinical science self assessments ccssa for reviewing comprehensive clinical content and assessing readiness for usmle step 2 ck clinical science mastery series
impact of the introduction of the clinical science mastery series - Jun 07 2022
web sep 6 2019 request pdf impact of the introduction of the clinical science mastery series on family medicine nbme subject examination performance background and objectives many medical schools assess
learning through self assessment investigating the relationship - Sep 10 2022
web oct 28 2016 the nbme clinical science mastery series csms are web administered self assessments built to the same content specifications as the nbme clinical science subject examinations that provide students with an opportunity to become familiar with content format and pacing
taking a subject examination nbme - Aug 21 2023
web take an nbme self assessment from our clinical science mastery series for the clinical science subject exams or the comprehensive self assessments for the comprehensive basic science or the comprehensive clinical science subject exams view the exam subject exam timing chart review the content outlines and sample items on the
how to use nbmes to study for step 2 ck blueprint prep - Feb 15 2023
web dec 15 2020 nbme self assessments for the clinical science mastery series let s not forget that nbme also offers practice shelf exams which you ve probably already taken for your clinical clerkships confusingly these go by a different name on the nbme website self assessments for the clinical science mastery series
nbme clinical science mastery form 1 download only - Mar 16 2023
web nbme clinical science mastery form 1 basic and clinical science course 1991 1992 mar 11 2023 basic and clinical science course mar 31 2022 basic and clinical science course aug 24 2021 basic and clinical science course sep 24 2021 basic and clinical science course master index 1993 1994 jan 17 2021 nursing programs 2010 mar 19
clinical mastery series nbme usmle step 1 - Aug 09 2022

web like to purchase self assessments from the clinicians mastery series are designed for students taking an nbme clinical science subject exam they feature multiple choice questions on clinical scientists content typically covered during a clerkship button medical education course

subject examinations nbme - May 18 2023

web the clinical science subject exams are typically used to assess third year student knowledge at the end of a clerkship learn more quicklinks overview how to purchase score reports resources advanced clinical the advanced clinical science subject exams are typically used to assess fourth year student knowledge at the end of a

master of science nus medicine graduate studies - Mar 04 2022

web the school of medicine graduate programme is a research oriented programme aimed at training competent biomedical scientists and clinician scientists who will spearhead and drive the medical biotechnology efforts in the industry 10 medical drive clinical research centre md11 level 5 05 01 singapore 117597 65 6601 2125 dgrs nus edu sg

comprehensive basic science self assessment national board - Jan 14 2023

web clinical science mastery series built to the same content specifications as the nbme clinical science subject examinations the self assessments included in this web based series allow participants to assess their knowledge of the clinical sciences self assessments are available for the following clinical neurology emergency medicine

investigating the relationship between a clinical science - Apr 05 2022

web given the widespread use of nbme clinical science subject examinations across many medical schools we therefore sought to investigate the relationship between clinical science subject examination composite scores and other clinical knowledge outcome measures specifically scores on usmle step 2 ck and step 3 using a large national

nbme clinical science mastery cyberlab sutd edu sg - Jul 08 2022

web nbme clinical science mastery graduate professional programs an overview 2011 grad 1 feb 12 2022 an overview contains more than 2 300 university college profiles that offer valuable information on graduate and professional degrees and certificates enrollment figures tuition financial support housing faculty

master of science in clinical nursing ngee ann academy - May 06 2022

web the master of science msc in clinical nursing is designed for snb registered nurses in singapore to scale up in their nursing career and build up exemplary skill in managing and leading contemporary healthcare practice research and

clinical mastery series nbme how do i assign edit or remove - Jul 20 2023

web assess your understating of this commercial sciences furthermore translate your self assessment score to an approximate score on the nbme point exam point scale clinical mastery series nbme how do i assign edit or remove an existing standards mastery

une ã trange rencontre petites histoires de falbourg t 52 by - Aug 10 2022
web sep 11 2023 une ã trange rencontre petites histoires de falbourg t 52 by bright gémini rencontres de neurologie bibliotrutt carnets d un dilettante une trange modele annonce femme site de rencontre site de rencontre histoires indites surnaturelles et inexpliques rencontre sortir ce soir 2011 une trange rencontre a stargate sg 1 fanfic
istanbul entre filles une bonne idée on vous dit tout - Jun 08 2022
web nov 6 2019 retrouvez toutes les informations sur la turquie ici bien évidemment la question de la sécurité ressort lorsqu on parle d istanbul entre filles et de la turquie il est évident qu il faut éviter certaines régions notamment celles ayant une frontière avec la syrie l irak ou encore l iran je vous parlerai d avantage de la
une a trange rencontre petites histoires de falbo pdf - Feb 16 2023
web mar 2 2023 une a trange rencontre petites histoires de falbo yeah reviewing a books une a trange rencontre petites histoires de falbo could go to your near connections listings this is just one of the solutions for you to be successful as understood execution does not suggest that you have wonderful points
une a trange rencontre petites histoires de falbo - Nov 13 2022
web une a trange rencontre petites histoires de falbo can be taken as capably as picked to act encyclopédie d histoire naturelle ou traité complet de cette science d après les travaux des naturalistes les plus éminents de tous les pays et
50 histoires courtes surprenantes et inspirantes sur la vie - Sep 11 2022
web oct 11 2022 résumé voici l histoire émouvante d un chien rejeté de tous et d un jeune garçon qui voulait l acheter pour une raison non apparente mots clefs être différent être rejeté rejet handicap compassion sensibilité être
histoires en français une histoire chaque jour - Jan 03 2022
web ce site vous propose des histoires à lire et des histoires à écouter nos histoires pour enfants peuvent être lues ou écoutées avant de dormir belle histoire ou petite histoire nos contes pour enfants feront passer à votre enfant un moment exceptionnel
explication d un passage une étrange rencontre 8eme annee de - May 07 2022
web sep 11 2017 explication d un passage une étrange rencontre 8eme annee de base explication d un passage une étrange rencontre 8eme annee de base cela permet de crier un effet magique et mystérieux propre aux histoires plus au moins réelles jacques s arrête et l aide a monter sur le siège des qu il la recueille dans sa voiture la
download free une a trange rencontre petites histoires de falbo - Apr 18 2023
web jul 12 2023 histoires de falbo free download pdf un étrange petit inconnu une étrange rencontre une étrange rencontre le rêve d une étrange rencontre les aventures de guthin le petit lutin la petite fille au manteau bleu coup de coeur de eliette abecassis prix femme actuelle 2015 le petit frère de la nuit petites histoires à faire frémir ii le

une a trange rencontre petites histoires de falbo - Jan 15 2023
web une a trange rencontre petites histoires de falbo latino high school graduation apr 25 2023 romo and falbo followed the school progress of 100 at risk students in austin texas beginning in 1989 when the students were fifteen years old drawing on extensive interviews with the students and their parents

une a trange rencontre petites histoires de falbo pdf 2023 - Jul 21 2023
web une a trange rencontre petites histoires de falbo pdf introduction une a trange rencontre petites histoires de falbo pdf 2023 title une a trange rencontre petites histoires de falbo pdf 2023 bukuclone ortax org created date 9 2 2023 6 41 51 am

une a trange rencontre petites histoires de falbo htaccess - May 19 2023
web mar 31 2023 trange rencontre petites histoires de falbo and numerous books collections from fictions to scientific research in any way among them is this une a trange rencontre petites histoires de falbo that can be

afro eros petites histoires érotiques en afrique - Feb 04 2022
web apr 23 2023 rose en sueur s épongeait régulièrement le front le soleil de janvier était cruel en ces latitudes tropicales cruauté exacerbée par le fait d être serrée dans le taxi en plus d elle il y avait quatre passagers le chauffeur avait bâché en mettant deux passagers à l avant il n y a pas de petit profit

les petites histoires filliozat 8 les stéréotypes filles garçons - Mar 05 2022
web sep 22 2022 les petites histoires filliozat 8 les stéréotypes filles garçons isabelle filliozat virginie limousin eric veillé nathan des milliers de livres avec la livraison chez vous en 1 jour ou en magasin avec 5 de réduction

une étrange rencontre ce2 récit lecture pdf à imprimer - Apr 06 2022
web une étrange rencontre ce2 récit lecture pdf à imprimer récit lecture sur une étrange rencontre au ce2 comme tous les soirs vincent et sa sœur léa rentrent ensemble de l école et comme d habitude ils ne sont pas d accord léa répète pour la cinquième fois non

une a trange rencontre petites histoires de falbo pdf book - Oct 12 2022
web mar 17 2023 une a trange rencontre petites histoires de falbo pdf eventually you will enormously discover a additional experience une a trange rencontre petites histoires de falbo pdf web une a trange rencontre petites histoires de falbo as recognized adventure as well as experience very nearly lesson amusement as

une a trange rencontre petites histoires de falbo pdf - Dec 14 2022
web une a trange rencontre petites histoires de falbo 1 4 downloaded from avenza dev avenza com on november 23 2022 by guest une a trange rencontre petites histoires de falbo as recognized adventure as competently as experience nearly lesson amusement as capably as

une a trange rencontre petites histoires de falbo - Mar 17 2023

web dec 14 2022 une a trange rencontre petites histoires de falbo 1 4 downloaded from staging friends library org on december 14 2022 by guest une a trange rencontre petites histoires de falbo right here we have countless ebook une a trange rencontre petites histoires de falbo and collections to check out

une a trange rencontre petites histoires de falbo download - Jun 20 2023

web un responsable de jardinerie victime de la fermeture de son entreprise assistera impuissant à l effondrement du monde autour de lui qu adviendra t il de l étrange rencontre entre ces deux destins

une a trange rencontre petites histoires de falbo pdf - Aug 22 2023

web know people have look numerous times for their favorite novels like this une a trange rencontre petites histoires de falbo but end up in harmful downloads rather than reading a good book with a cup of coffee in the afternoon instead they are facing with some malicious bugs inside their laptop une a trange rencontre petites histoires de

une petite histoire imaginaire dans la forêt cours français facile - Jul 09 2022

web exemple d une petite histoire imaginaire dans la forêt 1 il était une fois un garçon qui se promenait dans une petite forêt lorsqu il a trouvé un grand tableau noir accroché à une vieille branche d arbre il était livré avec une boîte de morceaux de craie et des étincelles brillantes jaillissaient du bout de chaque morceau de craie

download solutions morrow guide to knot for sailing fishing - Apr 13 2023

web buch der knoten the field guide to knots feb 24 2023 a fasten ating guide to knots for every adventure the perfect knot can make any job quicker easier and

pdf download the morrow guide to knots for sailing - Aug 17 2023

web jan 10 2022 the morrow guide to knots for sailing fishing camping climbing copy link download isbooktoday com freedom 0688012264 synopsis the

amazon com customer reviews the morrow guide to knots for - May 14 2023

web sailing knots may 08 2022 knots step by step sep 19 2020 from camping to rock climbing your safety depends on choosing and tying knots correctly with this handy

the morrow guide to knots for sailing fishing camping climbing - Apr 01 2022

web from the co founder of the international guide of knot tyers comes an oversize easy to follow guide perfect for sailers campers fishermen climbers and everyone else who

morrow guide to knot for sailing fishing camping c s c - Dec 09 2022

web morrow guide to knot for sailing fishing camping c is available in our digital library an online access to it is set as public so you can download it instantly our books collection

the morrow guide to knots for sailing fishing - Jul 16 2023

web originally written in italian but translated into english by maria piotrowska the morrow guide discloses the secrets of knots for sailing fishing camping and climbing with

the morrow guide to knots for sailing fishing camping climbing - Jun 15 2023

web the morrow guide to knots for sailing fishing camping climbing how customer reviews and ratings work read more 48 people found this helpful sign in to filter

morrow guide to knot for sailing fishing camping c book - Mar 12 2023

web morrow guide to knot for sailing fishing camping c 3 3 hesitate to use her keen eye quick mind and steady nerve to bring a murderer to justice sj bennett captures queen

the morrow guide to knots for sailing fishing camping climbing - Sep 18 2023

web the morrow guide to knots for sailing fishing camping climbing by bigon mario publication date 1982 topics knots and splices publisher new york w morrow

morrow guide to knot for sailing fishing camping c full pdf - Dec 29 2021

web sep 1 1982 a full color guide to mastering seventy useful knots for sailors fisherman campers climbers homeowners and all lovers of the outdoors the morrow guide to

morrow guide to knot for sailing fishing camping c amoa - Jul 04 2022

web morrow guide to knot for sailing fishing camping c 3 3 knots as well as explaining in which situation each knot should be used not only can you impress your friends and

morrow guide to knots for sailing fishing camping climbing - Oct 19 2023

web morrow guide to knots for sailing fishing camping climbing on amazon com free shipping on qualifying offers

morrow guide to knot for sailing fishing camping c 2022 - Nov 08 2022

web morrow guide to knot for sailing fishing camping c 1 omb no morrow guide to knot for sailing fishing camping c deek and bryan finally tie the knot pro knot

morrow guide to knot for sailing fishing camping c full pdf - Feb 28 2022

web sep 1 1982 the world s bestselling book on knots a classic resource illustrated easy to use and definitive a full color guide to mastering seventy useful knots for generations

morrow guide to knot for sailing fishing camping c pdf lfe - Oct 07 2022

web morrow guide to knot for sailing fishing camping c knack knots you need the ultimate book of everyday knots cows in the maze the art of knotting and splicing the

morrow guide to knot for sailing fishing camping c protese - Sep 06 2022

web indispensable guide to the variety of cords and ropes to use their breaking strengths construction and application each

knot is clearly identified by category from angling

the morrow guide to knots for sailing by mario bigon - Jan 30 2022

web fifteen years among the top knots or life in korea morrow guide to knot for sailing fishing camping c downloaded from mail lafamigliawv com by guest lilly carolyn

morrow guide to knot for sailing fishing camping c - May 02 2022

web the morrow guide to knots for sailing fishing camping climbing groups discussions quotes ask the author the morrow guide to knots includes clear illustrated step by

morrow guide to knot for sailing fishing camping c copy - Aug 05 2022

web the ultimate book of everyday knots morrow guide to knot for sailing fishing camping c downloaded from amoa arthouse org by guest tanya middleton the

morrow guide to knot for sailing fishing camping c pdf - Feb 11 2023

web camping fanatiks blog is all about camping hiking and hanging out outdoors we have tips for just some good info about these activities the morrow guide to knots for

morrow guide to knot for sailing fishing camping c 2022 - Jun 03 2022

web morrow guide to knot for sailing fishing camping c 1 morrow guide to knot for sailing fishing camping c the ultimate encyclopedia of knots ropework rock

the morrow guide to knots for sailing fishing camping climbing - Nov 27 2021

the morrow guide to knots for sailing fishing camping - Jan 10 2023

web it will not waste your time acknowledge me the e book will certainly make public you new event to read just invest little become old to edit this on line notice morrow guide to