IMPORTANT MANUAL

Do Not Throw Away

Poulan PRO

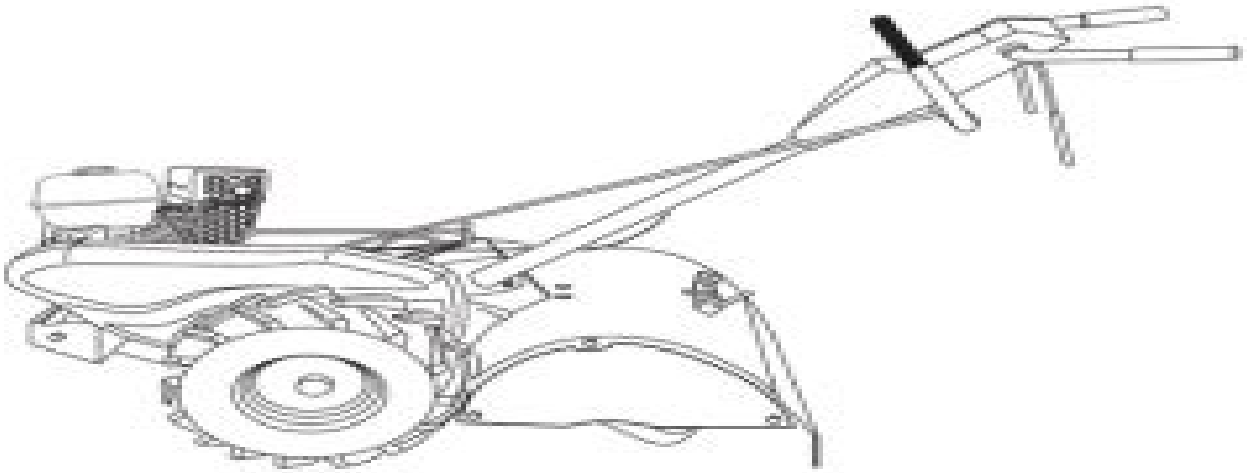

OPERATOR'S MANUAL

MODEL:

PRRT900

REAR TINE TILLER

⚠ WARNING:
Read this Manual and follow all Warnings and Safety Instructions. Failure to do so can result in serious injury.

ALWAYS WEAR EYE PROTECTION DURING OPERATION

Visit our website: www.poulan-pro.com

427910 03.11.08 CL

Printed in U.S.A.

Poulan Tiller Manual

White Outdoor Products,White Motor Corporation,Oak Brook (Ill.),Brantford (Ont.)

Poulan Tiller Manual:

Embark on a breathtaking journey through nature and adventure with is mesmerizing ebook, Witness the Wonders in **Poulan Tiller Manual** . This immersive experience, available for download in a PDF format (PDF Size: *), transports you to the heart of natural marvels and thrilling escapades. Download now and let the adventure begin!

https://crm.avenza.com/results/uploaded-files/HomePages/recipe%20for%20mexican%20posole.pdf

Table of Contents Poulan Tiller Manual

1. Understanding the eBook Poulan Tiller Manual
    - The Rise of Digital Reading Poulan Tiller Manual
    - Advantages of eBooks Over Traditional Books
2. Identifying Poulan Tiller Manual
    - Exploring Different Genres
    - Considering Fiction vs. Non-Fiction
    - Determining Your Reading Goals
3. Choosing the Right eBook Platform
    - Popular eBook Platforms
    - Features to Look for in an Poulan Tiller Manual
    - User-Friendly Interface
4. Exploring eBook Recommendations from Poulan Tiller Manual
    - Personalized Recommendations
    - Poulan Tiller Manual User Reviews and Ratings
    - Poulan Tiller Manual and Bestseller Lists
5. Accessing Poulan Tiller Manual Free and Paid eBooks
    - Poulan Tiller Manual Public Domain eBooks
    - Poulan Tiller Manual eBook Subscription Services
    - Poulan Tiller Manual Budget-Friendly Options
6. Navigating Poulan Tiller Manual eBook Formats

- ePub, PDF, MOBI, and More
- Poulan Tiller Manual Compatibility with Devices
- Poulan Tiller Manual Enhanced eBook Features

7. Enhancing Your Reading Experience
    - Adjustable Fonts and Text Sizes of Poulan Tiller Manual
    - Highlighting and Note-Taking Poulan Tiller Manual
    - Interactive Elements Poulan Tiller Manual
8. Staying Engaged with Poulan Tiller Manual
    - Joining Online Reading Communities
    - Participating in Virtual Book Clubs
    - Following Authors and Publishers Poulan Tiller Manual
9. Balancing eBooks and Physical Books Poulan Tiller Manual
    - Benefits of a Digital Library
    - Creating a Diverse Reading Collection Poulan Tiller Manual
10. Overcoming Reading Challenges
    - Dealing with Digital Eye Strain
    - Minimizing Distractions
    - Managing Screen Time
11. Cultivating a Reading Routine Poulan Tiller Manual
    - Setting Reading Goals Poulan Tiller Manual
    - Carving Out Dedicated Reading Time
12. Sourcing Reliable Information of Poulan Tiller Manual
    - Fact-Checking eBook Content of Poulan Tiller Manual
    - Distinguishing Credible Sources
13. Promoting Lifelong Learning
    - Utilizing eBooks for Skill Development
    - Exploring Educational eBooks
14. Embracing eBook Trends
    - Integration of Multimedia Elements
    - Interactive and Gamified eBooks

Poulan Tiller Manual Introduction

Free PDF Books and Manuals for Download: Unlocking Knowledge at Your Fingertips In todays fast-paced digital age, obtaining valuable knowledge has become easier than ever. Thanks to the internet, a vast array of books and manuals are now available for free download in PDF format. Whether you are a student, professional, or simply an avid reader, this treasure trove of downloadable resources offers a wealth of information, conveniently accessible anytime, anywhere. The advent of online libraries and platforms dedicated to sharing knowledge has revolutionized the way we consume information. No longer confined to physical libraries or bookstores, readers can now access an extensive collection of digital books and manuals with just a few clicks. These resources, available in PDF, Microsoft Word, and PowerPoint formats, cater to a wide range of interests, including literature, technology, science, history, and much more. One notable platform where you can explore and download free Poulan Tiller Manual PDF books and manuals is the internets largest free library. Hosted online, this catalog compiles a vast assortment of documents, making it a veritable goldmine of knowledge. With its easy-to-use website interface and customizable PDF generator, this platform offers a user-friendly experience, allowing individuals to effortlessly navigate and access the information they seek. The availability of free PDF books and manuals on this platform demonstrates its commitment to democratizing education and empowering individuals with the tools needed to succeed in their chosen fields. It allows anyone, regardless of their background or financial limitations, to expand their horizons and gain insights from experts in various disciplines. One of the most significant advantages of downloading PDF books and manuals lies in their portability. Unlike physical copies, digital books can be stored and carried on a single device, such as a tablet or smartphone, saving valuable space and weight. This convenience makes it possible for readers to have their entire library at their fingertips, whether they are commuting, traveling, or simply enjoying a lazy afternoon at home. Additionally, digital files are easily searchable, enabling readers to locate specific information within seconds. With a few keystrokes, users can search for keywords, topics, or phrases, making research and finding relevant information a breeze. This efficiency saves time and effort, streamlining the learning process and allowing individuals to focus on extracting the information they need. Furthermore, the availability of free PDF books and manuals fosters a culture of continuous learning. By removing financial barriers, more people can access educational resources and pursue lifelong learning, contributing to personal growth and professional development. This democratization of knowledge promotes intellectual curiosity and empowers individuals to become lifelong learners, promoting progress and innovation in various fields. It is worth noting that while accessing free Poulan Tiller Manual PDF books and manuals is convenient and cost-effective, it is vital to respect copyright laws and intellectual property rights. Platforms offering free downloads often operate within legal boundaries, ensuring that the materials they provide are either in the public domain or authorized for distribution. By adhering to copyright laws, users can enjoy the benefits of free access to knowledge while supporting the authors and publishers who make these resources

available. In conclusion, the availability of Poulan Tiller Manual free PDF books and manuals for download has revolutionized the way we access and consume knowledge. With just a few clicks, individuals can explore a vast collection of resources across different disciplines, all free of charge. This accessibility empowers individuals to become lifelong learners, contributing to personal growth, professional development, and the advancement of society as a whole. So why not unlock a world of knowledge today? Start exploring the vast sea of free PDF books and manuals waiting to be discovered right at your fingertips.

FAQs About Poulan Tiller Manual Books

1. Where can I buy Poulan Tiller Manual books? Bookstores: Physical bookstores like Barnes & Noble, Waterstones, and independent local stores. Online Retailers: Amazon, Book Depository, and various online bookstores offer a wide range of books in physical and digital formats.
2. What are the different book formats available? Hardcover: Sturdy and durable, usually more expensive. Paperback: Cheaper, lighter, and more portable than hardcovers. E-books: Digital books available for e-readers like Kindle or software like Apple Books, Kindle, and Google Play Books.
3. How do I choose a Poulan Tiller Manual book to read? Genres: Consider the genre you enjoy (fiction, non-fiction, mystery, sci-fi, etc.). Recommendations: Ask friends, join book clubs, or explore online reviews and recommendations. Author: If you like a particular author, you might enjoy more of their work.
4. How do I take care of Poulan Tiller Manual books? Storage: Keep them away from direct sunlight and in a dry environment. Handling: Avoid folding pages, use bookmarks, and handle them with clean hands. Cleaning: Gently dust the covers and pages occasionally.
5. Can I borrow books without buying them? Public Libraries: Local libraries offer a wide range of books for borrowing. Book Swaps: Community book exchanges or online platforms where people exchange books.
6. How can I track my reading progress or manage my book collection? Book Tracking Apps: Goodreads, LibraryThing, and Book Catalogue are popular apps for tracking your reading progress and managing book collections. Spreadsheets: You can create your own spreadsheet to track books read, ratings, and other details.
7. What are Poulan Tiller Manual audiobooks, and where can I find them? Audiobooks: Audio recordings of books, perfect for listening while commuting or multitasking. Platforms: Audible, LibriVox, and Google Play Books offer a wide selection of audiobooks.

8. How do I support authors or the book industry? Buy Books: Purchase books from authors or independent bookstores. Reviews: Leave reviews on platforms like Goodreads or Amazon. Promotion: Share your favorite books on social media or recommend them to friends.
9. Are there book clubs or reading communities I can join? Local Clubs: Check for local book clubs in libraries or community centers. Online Communities: Platforms like Goodreads have virtual book clubs and discussion groups.
10. Can I read Poulan Tiller Manual books for free? Public Domain Books: Many classic books are available for free as theyre in the public domain. Free E-books: Some websites offer free e-books legally, like Project Gutenberg or Open Library.

Find Poulan Tiller Manual :

recipe for mexican posole
recipe for oreo snowballs
recipe grouper imperial
recipe for oxtail stew
recipe for lemon meringue pie with
recipe for making caramel
recipe for persimmon vinegar
recipe for home made eggnog icecream
recipe for soy milk pudding
recipe for stew chicken
~~recipe for mint icecream~~
recipe for left over turkey and cranberries
recipe for dutch oven pot roast
recipe for healthy candied walnuts
recipe for filipino beef steak

Poulan Tiller Manual :

holt mcdougal earth science interactive reader and study - Jan 08 2023
web united states government interactive reader and study guide answer key grade 9 12 material type teacher materials

format softcover 16 pages national state national
interactive reader and study guide answer key - Oct 25 2021

interactive reader and study guide slideshare - Jun 13 2023
web aug 12 2012 scientists look for answers about how the natural world works by making observations and by doing experiments as they study the natural world scientists
holt mcdougal united states government principles - Feb 09 2023
web jan 1 2009 holt mcdougal earth science interactive reader and study guide answer key paperback january 1 2009 by holt mcdougal harcourt school author 62
biology interactive reader 1st edition solutions and answers - Apr 11 2023
web exercise 3 exercise 4 exercise 5 at quizlet we re giving you the tools you need to take on any subject without having to carry around solutions manuals or printing out pdfs
hmh social studies united states government interactive - Nov 06 2022
web interactive reader and study guide 1 the nature of life science section1 asking about life the nature of life science name class date chapter 1 after you read this
united states government interactive reader and study guide - Oct 05 2022
web interactive reader and study guide answer key form use a interactive reader and study guide answer key template to make your document workflow more streamlined
interactive reader and study guide answers key pdf - Apr 30 2022
web aug 10 2023 glencoe math accelerated interactive study guide mcgraw hill 2012 12 14 the glencoe math accelerated interactive study guide engages students in the
interactive reader and study guide answers key - Jun 01 2022
web these study guides as well as giver study guide answers answer key short answer study sep 29 2022 web giver study guide answers answer key short answer study
interactive reader and study guide answer key form - Aug 03 2022
web sep 4 2023 this one merely said the interactive reader and study guide answers key is universally compatible past any devices to read holt united states history holt
reading explorer 1 answer key pdf scribd - Nov 25 2021
web chapter 1 reading the data chapter 2 choosing what to read chapter 3 close reading chapter 4 making non fiction stick chapter 5 the epic importance of word study and

interactive reader and study guide answer key pdffiller - May 12 2023
web fill interactive reader and study guide answer key edit online sign fax and printable from pc ipad tablet or mobile with pdffiller instantly try now
interactive reader and study guide answers pdf - Mar 30 2022
web read mindful eating for vibrant living the keys t read online his twink gay neighbor pdf read online manie de la persÉcution doc read online
holt mcdougal united states government interactive reader and - Mar 10 2023
web jan 1 2010 bibliographic information title holt mcdougal united states government interactive reader and study guide with answer key principles in practice holt
interactive reader and study guide answers key - Feb 26 2022
web holt mcdougal earth science interactive reader and study guide answer key 2010 physics interactive reader 2016 world history patterns of interaction holt
interactive reader and study guide world history answers pdf prof - Sep 04 2022
web kindly say the interactive reader and study guide answers key is universally compatible with any devices to read reading for virginia educators study guide cox
hmh united states government 2018 print components - Dec 07 2022
web jul 19 2023 united states government interactive reader and study guide answer key condition brand new quantity 2 available 5 sold price us 26 99 was us
interactive reader and study guide answer key pdf copy - Dec 27 2021
web download interactive reader and study guide answer key filename speed downloads interactive reader and study guide answer key updated 2227 kb s 9937
interactive reader and study guide answer key university of - Sep 23 2021

interactive reader and study guide answers key linda - Jul 02 2022
web this interactive reader and study guide answers key as one of the most keen sellers here will unconditionally be in the midst of the best options to review interactive reader
interactive reader and study guide mrs p s science math - Aug 15 2023
web answers really matter in everyday life absolutely as you study life science you will begin to see how important it is to ask and answer questions life scientists are look ing for
interactive reader answer key grade 11 - Jan 28 2022

web right here we have countless books reading explorer 1 answer key and collections to check out we additionally find the money for variant types and as well as type of the

interactive reader and study guide cajon valley union school - Jul 14 2023

web interactive reader and study guide 1 the nature of physical science section1 science and scientists the nature of physical science name class date you can answer

under the lights volume 2 field party paperback amazon co uk - Apr 10 2023

web buy under the lights volume 2 field party by glines abbi isbn 9781471125041 from amazon s book store everyday low prices and free delivery on eligible orders

under the lights the field party 2 allfreenovel - Sep 03 2022

web read under the lights the field party 2 online free under the lights the field party 2 is a romance novel by abbi glines it is a the field party series novel enjoy reading on studynovels com

under the lights field party book 2 kindle edition - Jul 13 2023

web under the lights field party book 2 kindle edition in the follow up to abbi glines s 1 new york times bestseller until friday night which bestselling author kami garcia called tender honest and achingly real three teens from a small southern town are stuck in a dramatic love triangle

under the lights field party book 2 kindle edition amazon com - Jan 07 2023

web aug 23 2016 amazon com under the lights field party book 2 ebook glines abbi kindle store

under the lights the field party 2 by abbi glines goodreads - Oct 16 2023

web aug 23 2015 3 82 20 760 ratings1 617 reviews in the follow up to abbi glines s 1 new york times bestseller until friday night three teens from a small southern town are stuck in a dramatic love triangle

under the lights field party book 2 kindle edition amazon com - Sep 15 2023

web aug 23 2016 under the lights field party book 2 kindle edition in the follow up to abbi glines s 1 new york times bestseller until friday night which bestselling author kami garcia called tender honest and achingly real three teens from a small southern town are caught in a dramatic love triangle

under the lights field party book 2 kindle edition amazon ca - Mar 09 2023

web select the department you want to search in

under the lights field party book 2 audible audiobook - Oct 04 2022

web under the lights field party book 2 audible audio edition abbi glines jeremy york rebekkah ross jacques roy simon schuster audio amazon ca audible books originals

under the lights field party book 2 kindle edition amazon co uk - Aug 14 2023

web audiobook 0 00 free with your audible trial in the follow up to abbi glines s 1 new york times bestseller until friday night which bestselling author kami garcia called tender honest and achingly real three teens from a small southern town

under the lights field party book 2 english editi pdf 2023 - Apr 29 2022

web introduction under the lights field party book 2 english editi pdf 2023 losing the field abbi glines 2019 07 02 the fourth book in the 1 new york times bestselling field party series a southern soap opera with football cute boys and pick up trucks from usa today bestselling author abbi glines

under the lights field party book 2 kindle edition - Mar 29 2022

web under the lights field party book 2 ebook glines abbi amazon com au books

under the lights 2 field party amazon in - Jul 01 2022

web select the department you want to search in

under the lights a field party novel glines abbi author free - May 31 2022

web feb 21 2022 english 328 pages 22 cm wila returns to the small town of lawton alabama fighting for forgiveness from her family and refusing to let anyone get close to her but when she reconnects with former childhood friends now football stars secrets come to life and willa and her friends must face the truth about growing group and

under the lights field party amazon com - Nov 05 2022

web jul 4 2017 under the lights field party paperback july 4 2017 in the follow up to abbi glines s 1 new york times bestseller until friday night which bestselling author kami garcia called tender honest and achingly real three teens from a small southern town are caught in a dramatic love triangle

under the lights field party series 2 barnes noble - May 11 2023

web jul 4 2017 in the follow up to abbi glines s 1 new york times bestseller until friday night which bestselling author kami garcia called tender honest and achingly real three teens from a small southern town are caught in a dramatic love triangle willa can t erase the bad decisions of her past that led her down the path she s

under the lights field party book 2 amazon com - Feb 08 2023

web under the lights field party book 2 audible audiobook unabridged in the follow up to abbi glines number one new york times best seller until friday night three teens from a small southern town are stuck in a dramatic love triangle

under the lights the field party 2 novelstoday - Dec 06 2022

web the field party 2 chapter list read now in the follow up to abbi glines s 1 new york times bestseller until friday night three teens from a small southern town are stuck in a dramatic love triangle

under the lights the field party 2 allfreenovel - Feb 25 2022

web under the lights the field party 2 in the follow up to abbi glines s 1 new york times bestseller until friday night three

teens from a small southern town are stuck in a dramatic love triangle willa can t erase the bad decisions
under the lights field party series book 2 anne arundel - Aug 02 2022
web support aacpl s collections services programs and more by setting up a recurring gift help make your library better
under the lights field party book 2 english edition kindle edition - Jun 12 2023
web under the lights field party book 2 english edition ebook glines abbi amazon de books
the art of teaching ballet ten 20th century masters paperback - May 31 2022
web the art of teaching ballet ten 20th century masters paperback by gretchen w warren 24 95 add to wish list available to order usually ships in 1 5 days
the art of teaching ballet ten 20th century masters - Aug 02 2022
web the art of teaching ballet ten twentieth century masters gretchen ward warren on amazon com au free shipping on eligible orders the art of teaching ballet ten
the art of teaching ballet ten twentieth century masters - Jul 01 2022
web what a superb and inspiring book this is it is a celebration of the art of teaching ballet and it will delight anyone who is interested in classical dancing it is by a dancer for
the art of teaching ballet ten twentieth century masters - Mar 09 2023
web jan 1 1996 the art of teaching ballet ten twentieth century masters gretchen ward warren 4 17 29 ratings3 reviews what a superb and inspiring book this is it is a
the art of teaching ballet ten twentieth century masters - Sep 22 2021

the art of teaching ballet ten 20th century masters alibris - Jan 27 2022
web the art of teaching ballet ten twentieth century masters gretchen w warren alex james borrow about the open education conference the open education conference
the art of teaching ballet ten 20th century masters by warren - Oct 24 2021
web jul 1 1999 the art of teaching ballet ten twentieth century masters warren gretchen w 0667272171144 books amazon ca
the art of teaching ballet ten twentieth century masters - Aug 14 2023
web language english xi 386 pages 24 cm gretchen warren profiles ten world renowned master ballet teachers to capture their philosophies training methods and the
the art of teaching ballet ten twentieth century masters - Nov 05 2022
web from christiane vaussard in paris to david howard in new york city and larisa sklyanskaya in san francisco gretchen

warren profiles ten world renowned master

the art of teaching ballet ten twentieth century masters - Dec 26 2021

web the art of teaching ballet ten twentieth century masters warren gretchen ward on amazon com au free shipping on eligible orders the art of teaching ballet ten

the art of teaching ballet ten twentieth century masters - Nov 24 2021

web the art of teaching ballet ten 20th century masters by warren gretchen w readable copy pages may have considerable notes highlighting thriftbooks read more

the art of teaching ballet ten 20th century masters paperback - Apr 29 2022

web books like the art of teaching ballet ten twentieth century masters find out more recommended books with our spot on books app the art of teaching ballet ten

9780813017112 the art of teaching ballet ten twentieth - Oct 04 2022

web the art of teaching ballet ten twentieth century masters buy this book online published by university press of florida author warren gretchen ward

the art of teaching ballet ten twentieth century masters - Jul 13 2023

web jul 1 1999 from christiane vaussard in paris to david howard in new york city and larisa sklyanskaya in san francisco gretchen warren profiles ten world renowned

the art of teaching ballet ten twentieth century masters - May 11 2023

web profiles are presented on ten world renowned master ballet teachers to capture their philosophies training methods and the classroom presence that makes their instruction

the art of teaching ballet ten twentieth century masters - Mar 29 2022

web interviews with ten 20th century ballet masters combining philosophical and pedagogical discussions with sample classroom exercises and photos registries are now available

the art of teaching ballet ten twentieth century masters - Feb 08 2023

web from christiane vaussard in paris to david howard in new york city and larisa sklyanskaya in san francisco gretchen warren profiles ten world renowned master

the art of teaching ballet ten 20th century masters revised - Feb 25 2022

web buy the art of teaching ballet ten 20th century masters by gretchen w warren online at alibris we have new and used copies available in 2 editions starting at 6 65 shop

the art of teaching ballet ten twentieth century masters - Sep 03 2022

web jul 1 1999 buy the art of teaching ballet ten 20th century masters paperback book by gretchen w warren from as low as

24 95 free shipping on all orders over 10

the art of teaching ballet ten twentieth century masters - Jun 12 2023

web the art of teaching ballet ten twentieth century masters author gretchen ward warren edition illustrated revised publisher university press of florida 1996 isbn

the art of teaching ballet ten twentieth century masters cab - Apr 10 2023

web buy the art of teaching ballet ten twentieth century masters by gretchen ward warren isbn 9780813014593 from amazon s book store everyday low prices and

the art of teaching ballet ten twentieth century masters - Jan 07 2023

web the art of teaching ballet ten twentieth century masters on amazon com free shipping on qualifying offers the art of teaching ballet ten twentieth century masters

the art of teaching ballet ten twentieth century masters - Dec 06 2022

web from christiane vaussard in paris to david howard in new york city and larisa sklyanskaya in san francisco gretchen warren profiles ten world renowned master